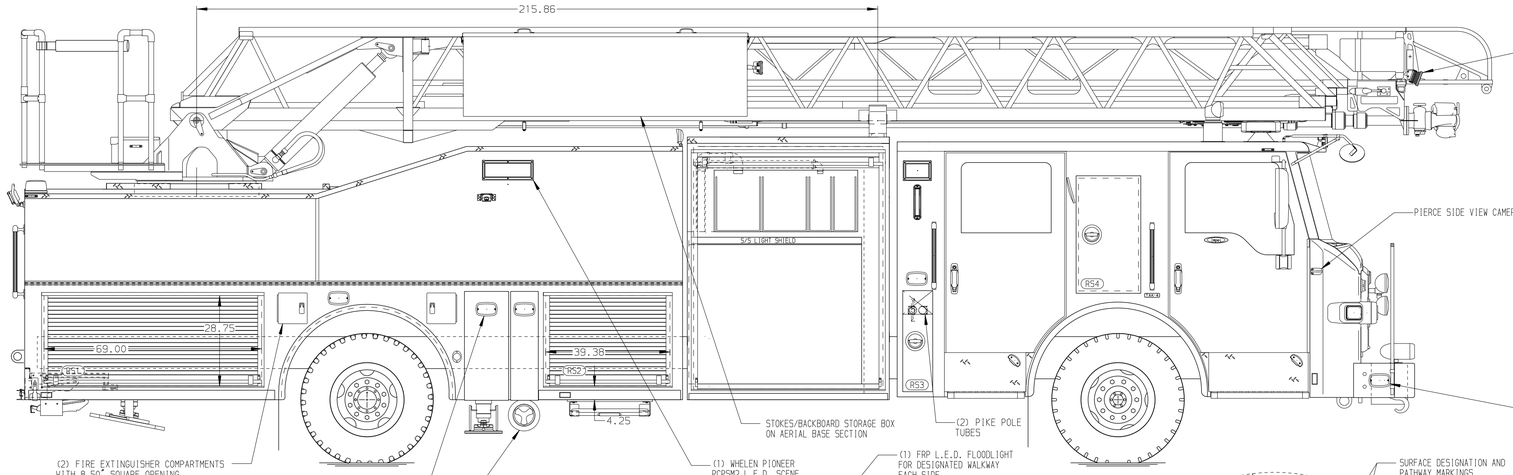


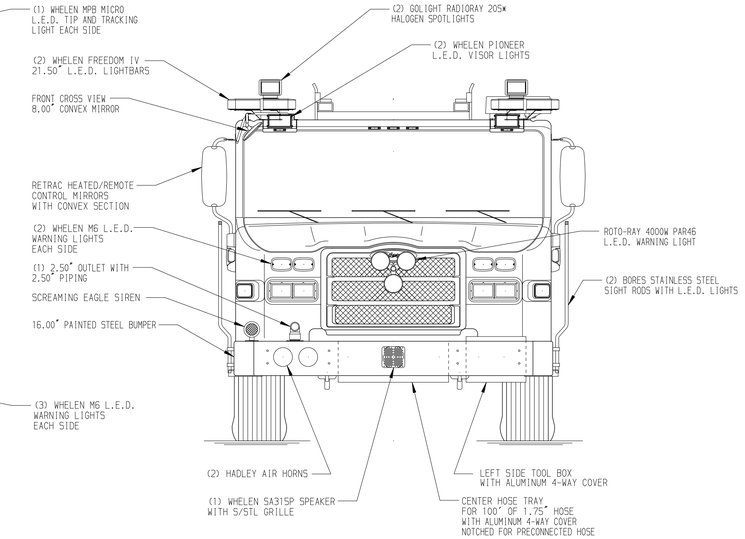


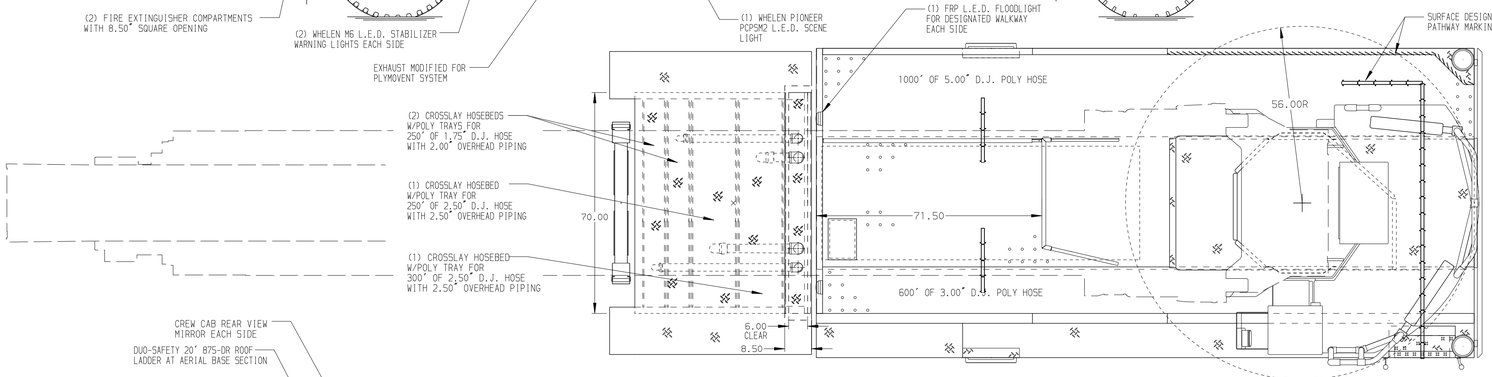


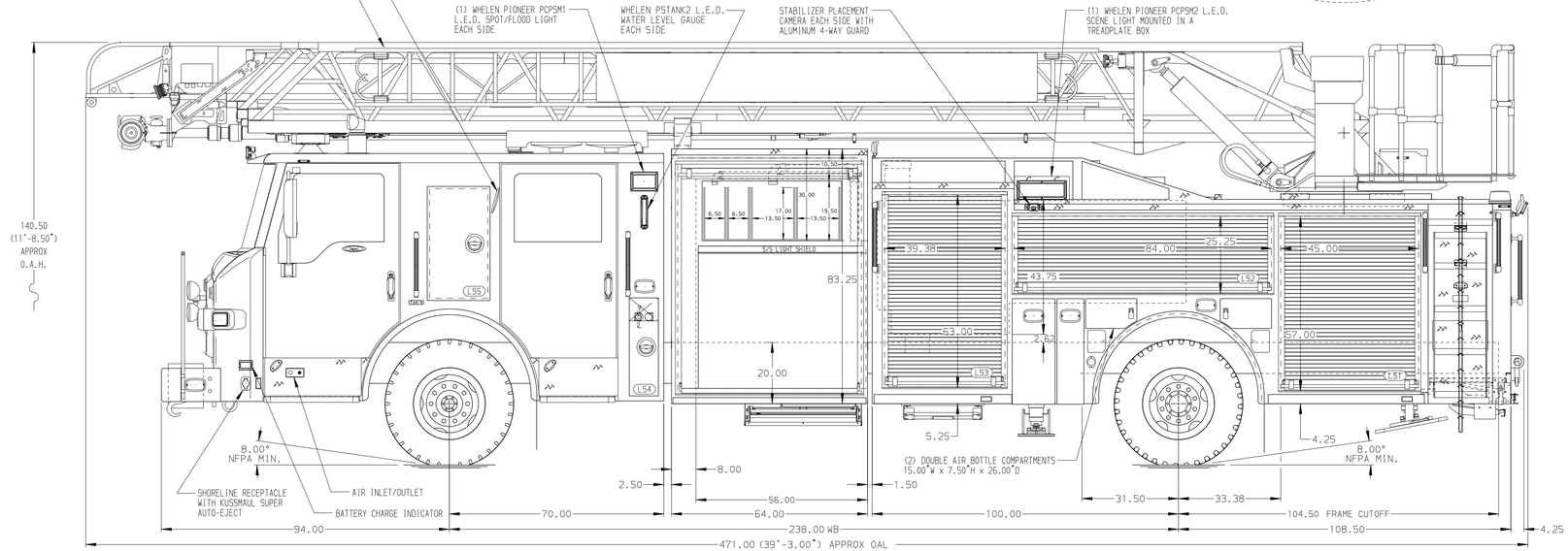


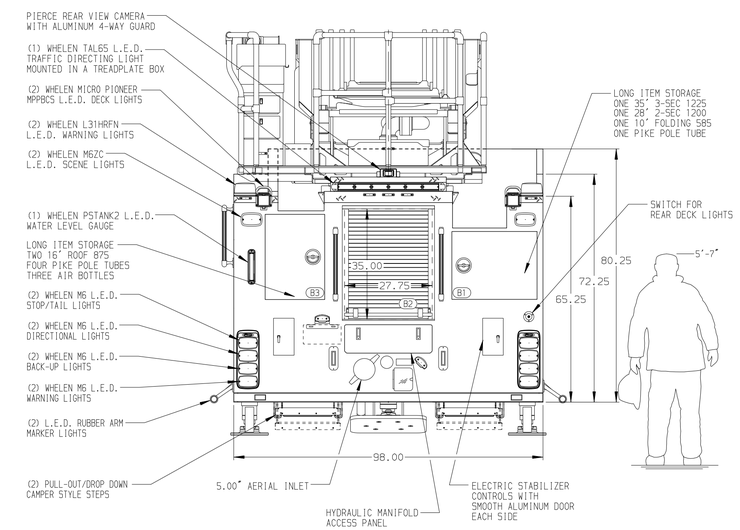


ALUMINUM BODY | MAXIMUM O.A.H. 140.50" (11'-8.50") | SIDE ROLL AND FRONTAL IMPACT PROTECTION

NOTE

DIMENSIONS SHOWN ARE APPROXIMATE AND ARE SUBJECT TO MINOR DEVIATIONS AS MAY OCCUR OR BE NECESSARY IN CONSTRUCTION.
MINOR DETAILS NOT SHOWN.

1. BATTERY CHARGER LOCATED BEHIND DRIVER SEAT
2. AIR COMPRESSOR LOCATED IN COMPARTMENT PER SHOP ORDER
3. FEDERAL RUMBLER-3 SPEAKER MOUNTED BEHIND FRONT BUMPER PER SHOP ORDER
4. SEVEN ADJUSTABLE FULL WIDTH/FULL DEPTH SHELVES IN COMPARTMENTS PER SHOP ORDER
5. TWO FLOOR MOUNTED SLIDE-OUT TRAYS IN COMPARTMENTS PER SHOP ORDER
6. ONE SWING-OUT ALUMINUM TOOL BOARD IN COMPARTMENT PER SHOP ORDER
7. TRIDENT FOLDING STEPS ON AERIAL DEVICE
8. L.E.D. LIGHTING ON AERIAL LADDER SECTIONS
9. 2-WAY INTERCOM SYSTEM BETWEEN AERIAL TIP AND TURNTABLE
10. LIFTING EYE ROPE RESCUE ATTACHMENT AT AERIAL TIP
11. NON-RAISED AERIAL PEDESTAL
12. 1500 GPM HIGH FLOW WATERWAY
13. ALUMINUM ON CAB ROOF
14. LIMITED RETRACTION NOT REQUIRED

| REV | DATE | BY | CH |
|---|---|---|---|
| 1 | 18NOV19 | TKA | CHS |
| 0 | 29OCT19 | TKA | CSH |

CHASSIS DATA
MAKE: PIERCE
MODEL: IMPEL

PIERCE MANUFACTURING INC.

TITLE: 107' ASCENDANT AERIAL LADDER AND BODY ASSEMBLY 500 GALLON WATER TANK
FOR: WEST HARTFORD, WEST HARTFORD, CONNECTICUT
DWG NO.: 34244AD

| JOB NO. | SCALE | DRAWN BY | CHECKED BY | SHEET SIZE | SHEET NO. |
|---|---|---|---|---|---|
| 34244 | 1:24 | TKA | CRI | D | 1 OF 1 |

DATE: 10SEP19 / 11SEP19

View File Created 19-NOV-2019 06:26:29