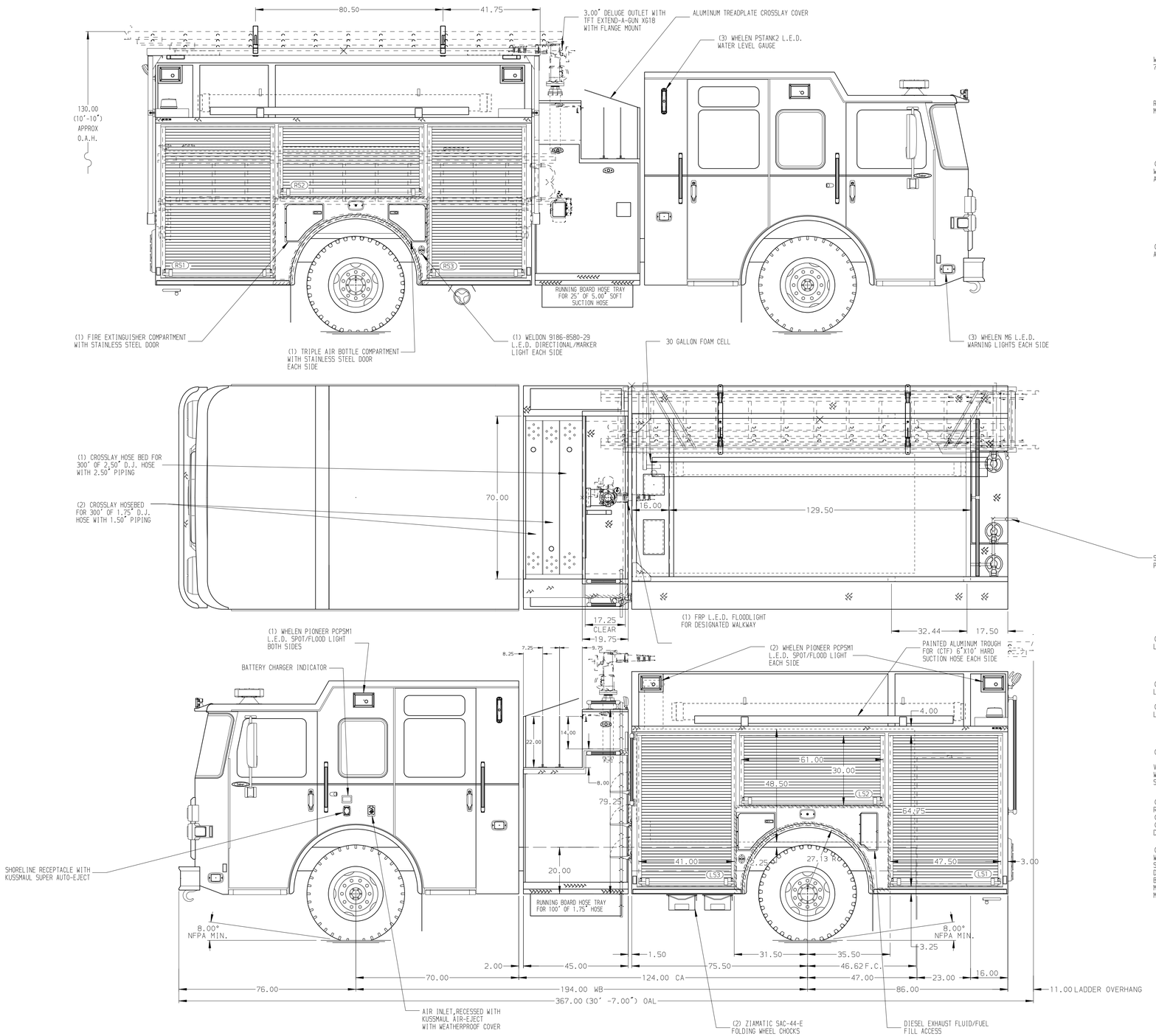

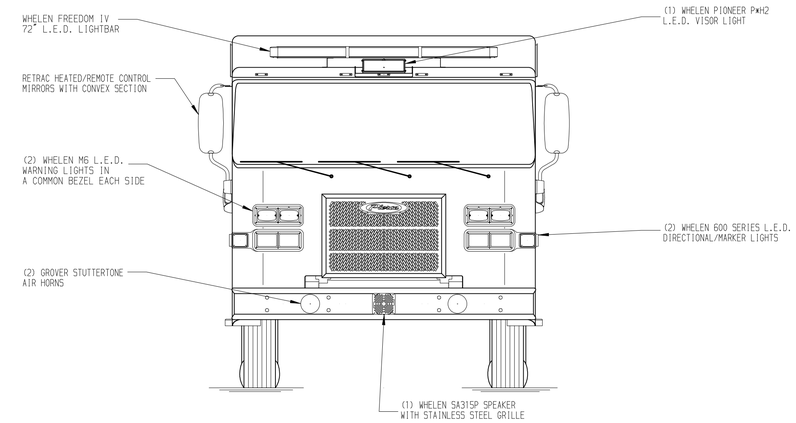

HOSEBED CAPACITIES
1 - 2000' OF 5.00" D.J. POLY HOSE
2 - 300' OF 3.00" D.J. HOSE

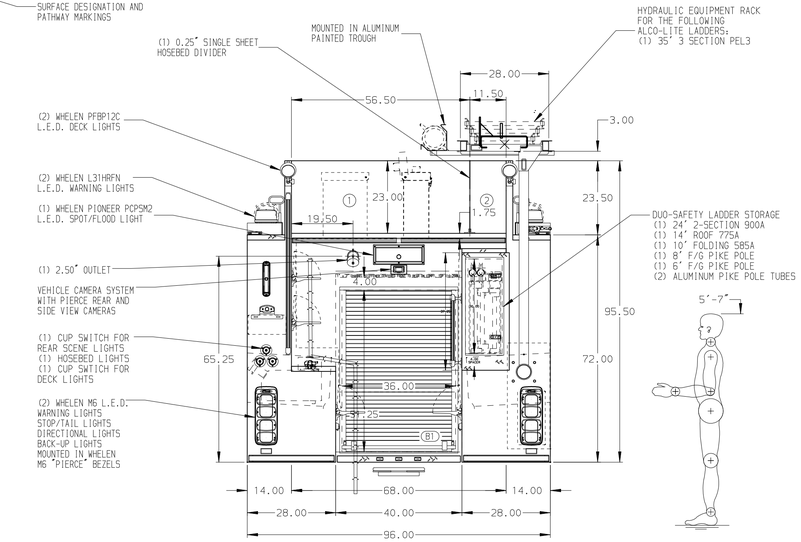

ALUMINUM BODY

MAXIMUM O.A.L. 367.00"

MAXIMUM O.A.H 132.00"

NOTE
DIMENSIONS SHOWN ARE APPROXIMATE AND ARE SUBJECT TO MINOR DEVIATIONS AS MAY OCCUR OR BE NECESSARY IN CONSTRUCTION.
MINOR DETAILS NOT SHOWN.

REV	DATE	BY	CH
7	07APR21	RHU	-
6	25FEB21	JLA	AJA
5	16DEC20	CDU	KOU

CHASSIS DATA
MAKE: PIERCE
MODEL: SABER FR

Pierce MANUFACTURING INC.

TITLE: 1500-D-1030P, 1000 GAL WATER W/30 GAL FOAM CELL 161" FH FDLER,LDRS. BTWN. TANK & S. SHEET,(3) X-LAYS
FOR: WARREN VOL. FIRE CO. INC. WARREN, CONNECTICUT
DWG NO.: 35937AD

JOB NO.	35937
SCALE	1:24
DATE	
DRAWN BY	JUS 09DEC20
CHECKED BY	CDU 09DEC20
SHEET SIZE	D
SHEET NO.	1 OF 1