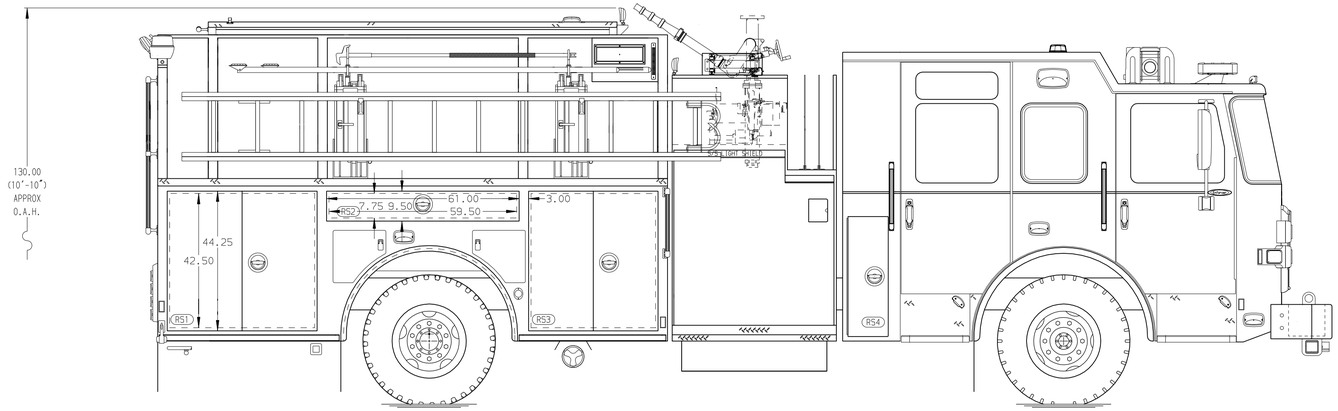

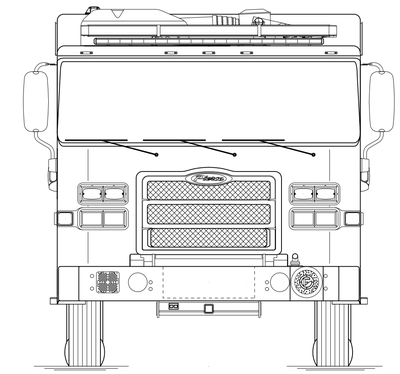

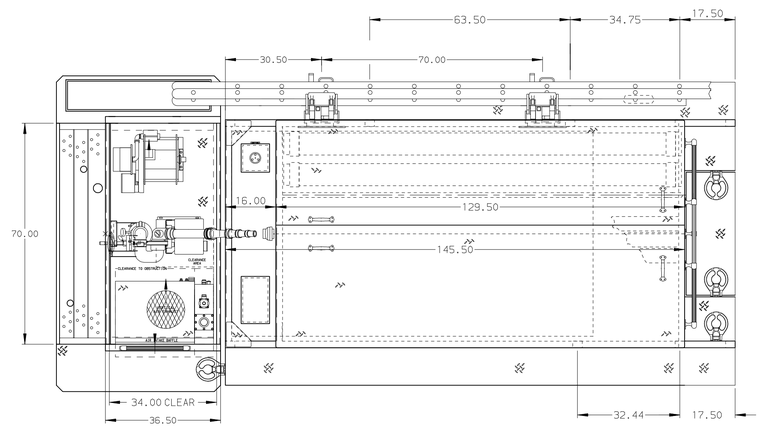

HOSEBED CAPACITIES

1. 1200' OF 5.00" HOSE
2. 600' OF 3.00" HOSE
3. 200' OF 1.75" HOSE

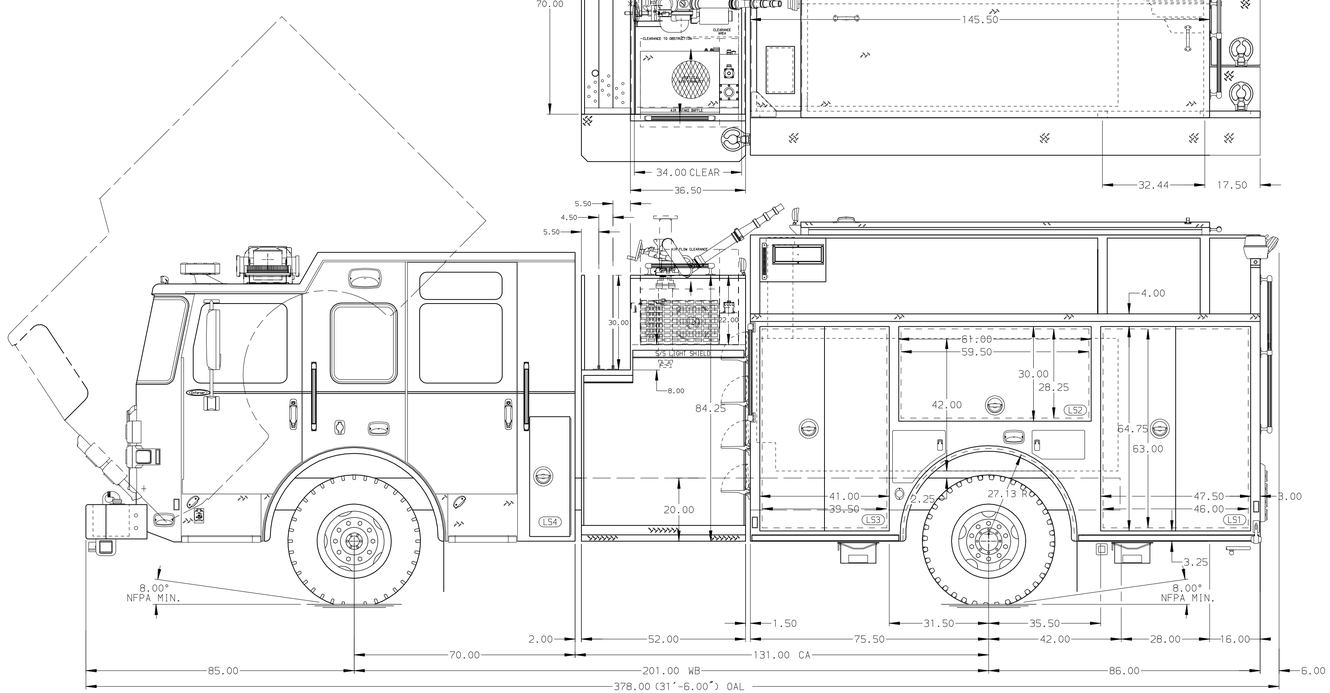

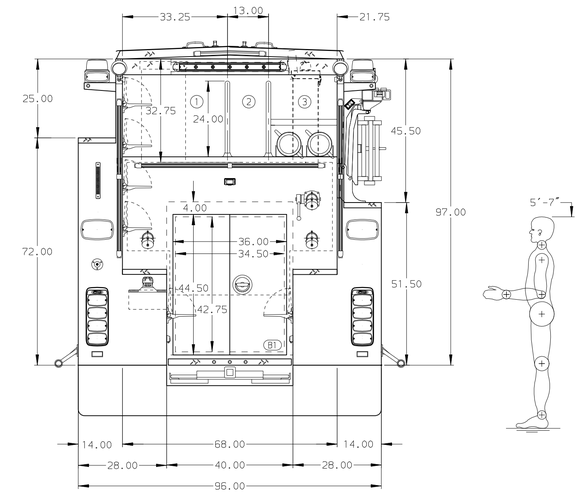

STAINLESS STEEL BODY

NOTE

DIMENSIONS SHOWN ARE APPROXIMATE AND ARE SUBJECT TO MINOR DEVIATIONS AS MAY OCCUR OR BE NECESSARY IN CONSTRUCTION.
MINOR DETAILS NOT SHOWN.

REV	DATE	BY	CH
V	12SEP18	LST	AZA

CUSTOMER APPROVAL

APPROVED BY: _____

DATE: _____

Pierce MANUFACTURING INC.

CHASSIS DATA	
MAKE	PIERCE
MODEL	ENFORCER
TITLE	1500-D-1000P, 970 GAL OF WATER W/ 30 GAL FOAM CELL 161" BODY, ZICO LADDER RACK, (3) X-LAYS
FOR	TAFTVILLE FIRE COMPANY BID# 267 FIREMATIC SUPPLY CO, INC. JOHN MACNICHOLL
DWG NO.	04-4765
JOB NO.	PRELIM
SCALE	1:24
DATE	
DRAWN BY	LST 18APR18
CHECKED BY	AZA 19APR18
SHEET SIZE	D
SHEET NO.	1 OF 1