PUMPER

BODY
Medium Aluminum 2nd Gen Pumper

CHASSIS
Saber FR Chassis

CHASSIS

AXLE, FRONT, CUSTOM
19,500 Lb TAK-4 Axle

AXLE, REAR
27,000 Lb Meritor Axle

ENGINE
450 HP Cummins L9 Engine

TRANSMISSION
Allison 6th Gen, 3000 EVS P

BUMPER
19" Extended Painted Steel

CAB
7010 Saber FR Cab

BODY

TOTAL TANK CAPACITY
1030 Gallon Poly Tank

WATER CAPACITY
1000 Gallons of Water

FOAM CELL
30 Gallon Foam Cell

COMPT, PUMPER, REAR
30.75" FF Rollup Rear Compt

COMPT, PUMPER, LEFT SIDE
152" Rollup Full Height Front & Rear FDLER

COMPT, PUMPER, RIGHT SIDE
152" Rollup Full Height Front & Rear FDLER

FIRE SUPPRESSION

PUMPHOUSE
42" Control Zone Side Mount

PUMP
1500 GPM Waterous CSU

CROSSLAYS, 1.50"
(2) 1.50" Standard Capacity

CROSSLAYS, 2.50"
2.50" Crosslay Not Required

SPEEDLAYS
Speedlays Not Required

GENERATOR
Generator Not Required

FOAM SYSTEM
External Foam System

SAFETY

Side Roll and Frontal Impact Protection

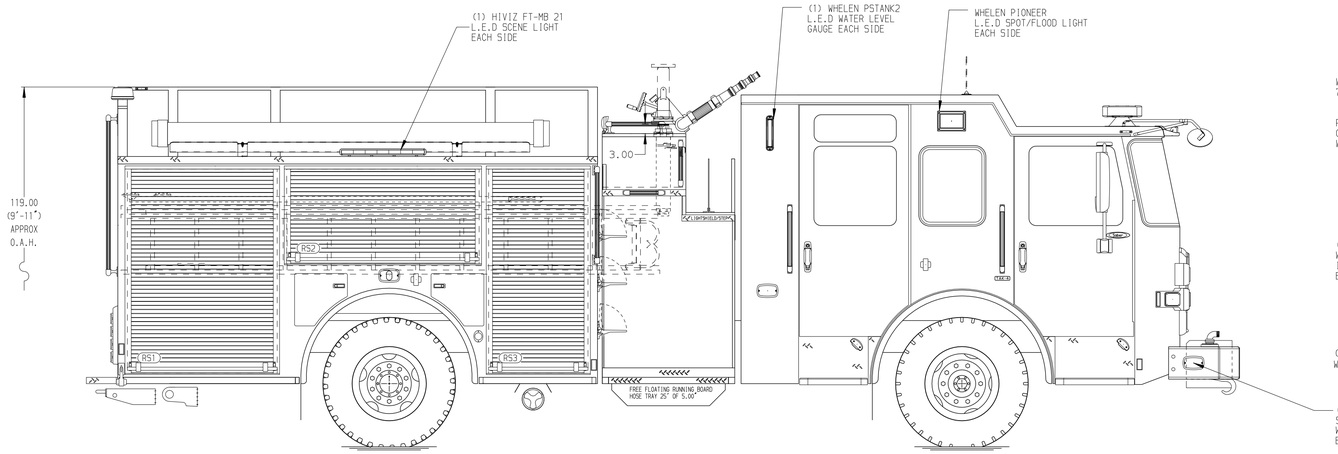

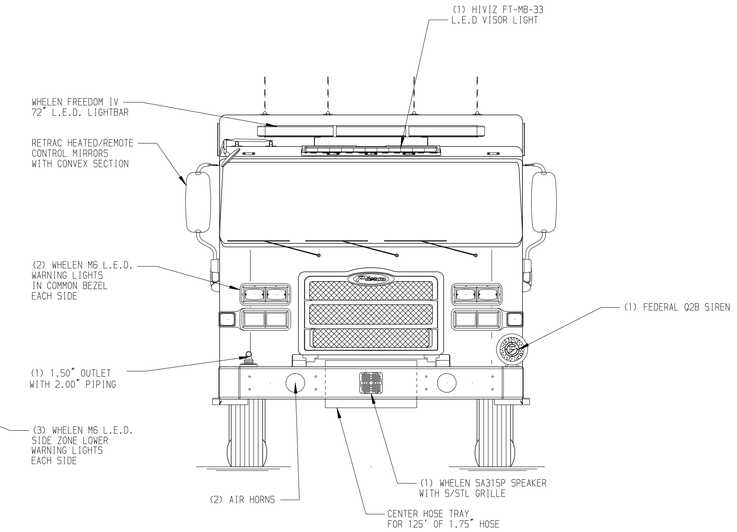

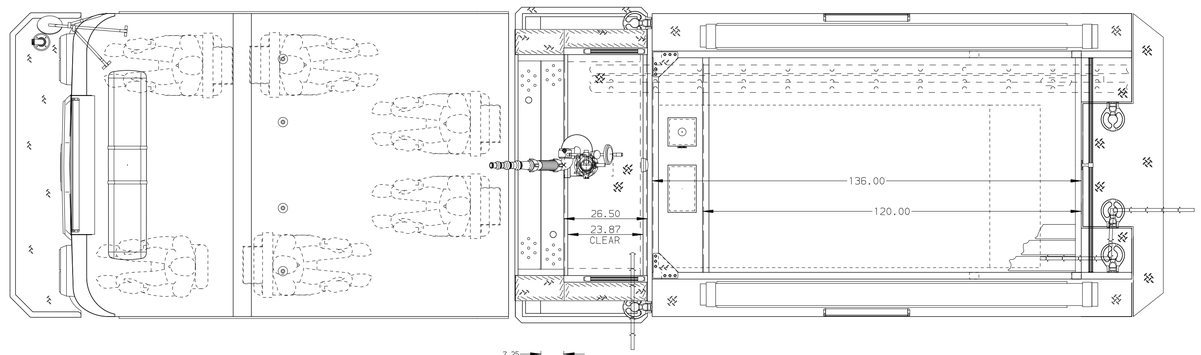

HOSEBED CAPACITY

BED 1
200' OF 2.50" D.J. POLY HOSE

BED 2
200' OF 3.00" D.J. POLY HOSE

BED 3
600' OF 3.00" D.J. POLY HOSE

BED 4
1000' OF 5.00" D.J. POLY HOSE

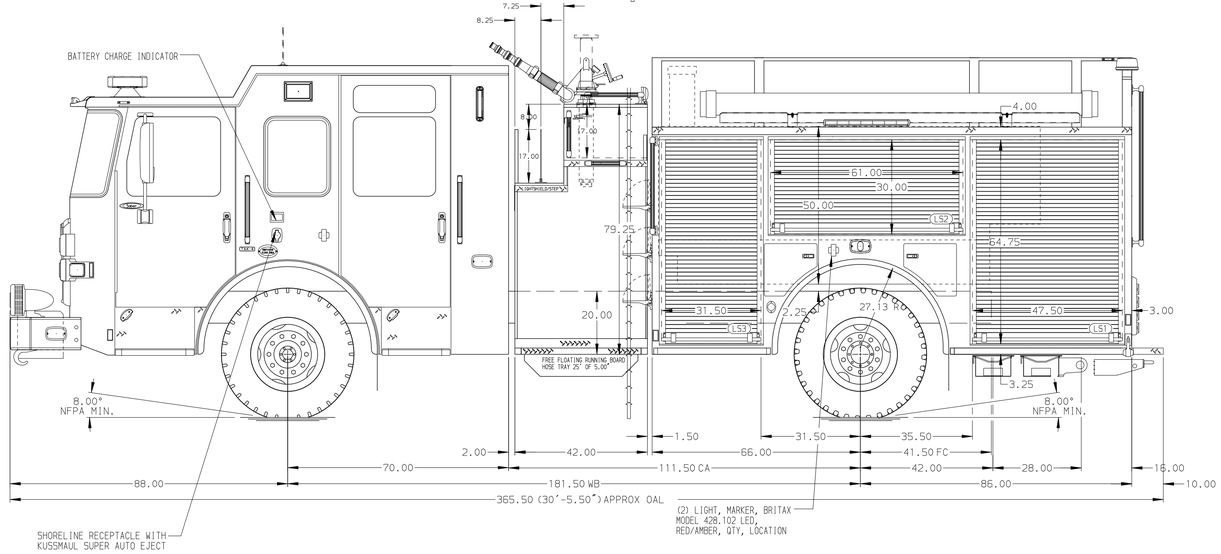

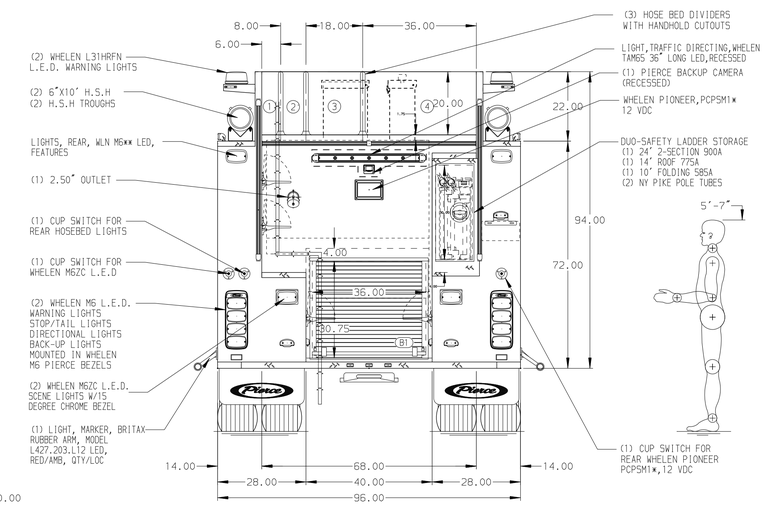

NOTE

DIMENSIONS SHOWN ARE APPROXIMATE AND ARE SUBJECT TO MINOR DEVIATIONS AS MAY OCCUR OR BE NECESSARY IN CONSTRUCTION.
MINOR DETAILS NOT SHOWN.

REV	DATE	BY	CH
5	25OCT24	ADP	CCS
4	27SEP24	VHO	CCS
3	27AUG24	VHO	EEM

CHASSIS DATA
MAKE: PIERCE
MODEL: SABER FR

Pierce MANUFACTURING INC.

TITLE: Pierce Pumper Approval Drawing
FOR: Stamford FD
DWG NO.: 41082AD

JOB NO.: 41082 (01-02)
SCALE: 1:24
DRAWN BY: VHO — DATE: 23APR24
CHECKED BY: MMF — DATE: 23APR24
SHEET SIZE: D
SHEET NO.: 1 OF 1

View File Created 25-OCT-2024 10:42:30