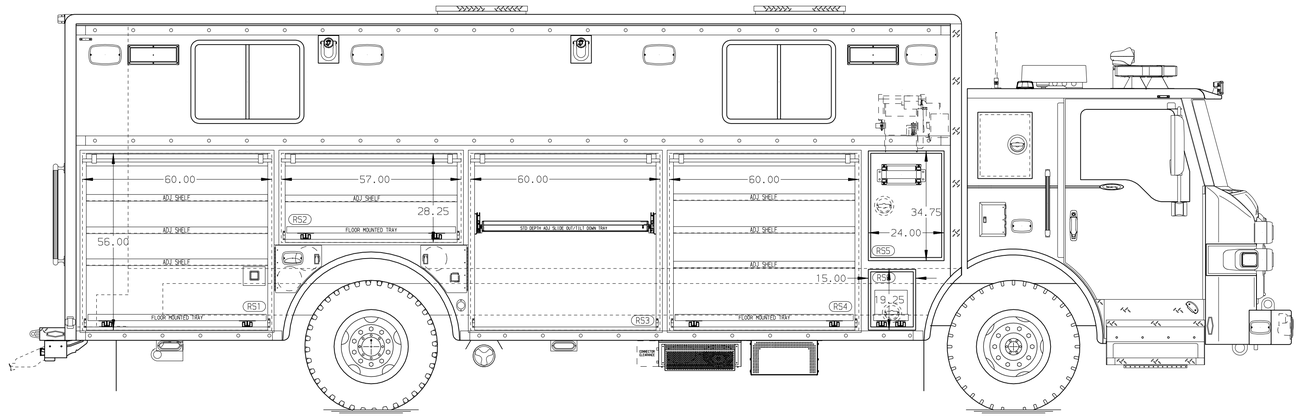

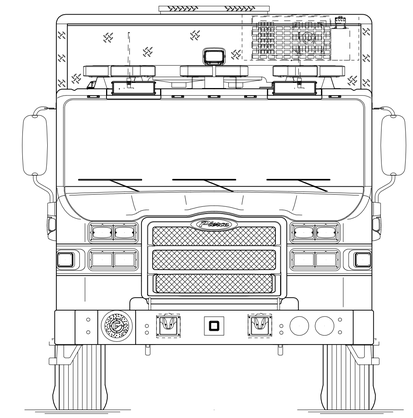

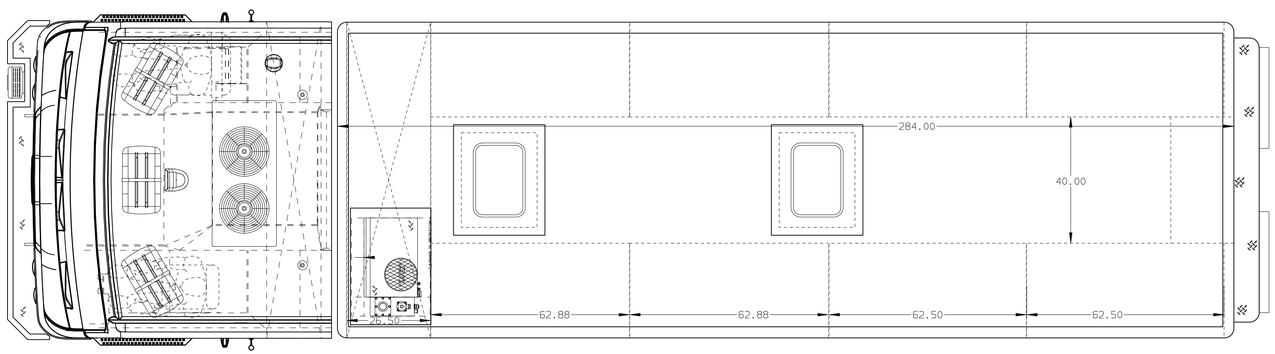

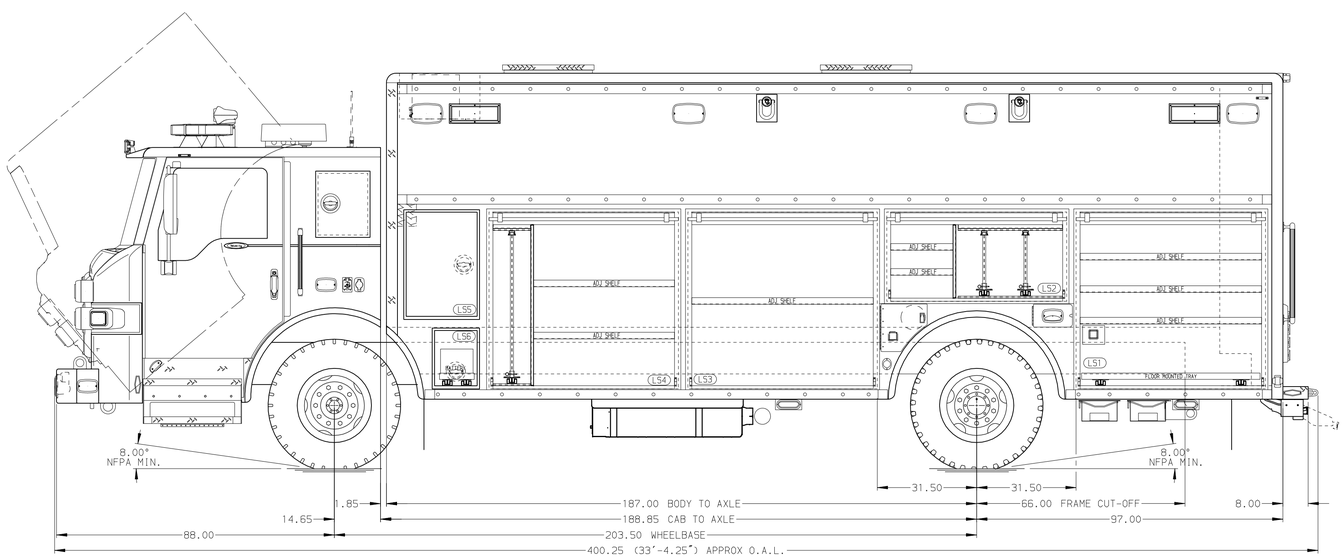

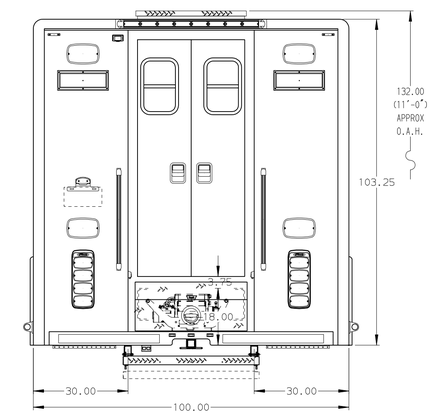

CUSTOMER APPROVAL

APPROVED BY: _____

DATE: _____

Pierce MANUFACTURING INC.

JOB NO.	PRELIM		
SCALE	1:24	DATE	
TITLE	HEAVY DUTY RESCUE WALKIN	DRAWN BY	DHE
		DATE	11DEC20
FOR	SOUTH WINDSOR FIRE DEPARTMENT BID #752 MICHAEL K HANRATTY	CHECKED BY	JJF
		DATE	17DEC20
DWG NO.	04-8315-SH1	SHEET SIZE	D
		SHEET NO.	1 OF 1

NOTE

DIMENSIONS SHOWN ARE APPROXIMATE AND ARE SUBJECT TO MINOR DEVIATIONS AS MAY OCCUR OR BE NECESSARY IN CONSTRUCTION.
MINOR DETAILS NOT SHOWN.

NOTES:
-

MAXIMUM O.A.H. 11'-1"

MAXIMUM O.A.L. 33'-5"

SIDE ROLL AND FRONTAL IMPACT PROTECTION

CLEAR DOOR WIDTH KEY

AMDOR ROLL UP DOORS:	-2 1/4"
GORTITE ROLL UP DOORS:	-2 1/2"
PIERCE DOUBLE LAP DOORS:	-4 1/4"
PIERCE LIFT-UP LAP DOORS:	-1 1/2"

(EX: 60"F-F - 2 1/4"= 57 3/4" CLEAR)
(F-F)= FRAME TO FRAME

REV	DATE	BY	CH
V	05JAN21	DHE	-

CHASSIS DATA
MAKE: PIERCE
MODEL: VX1500