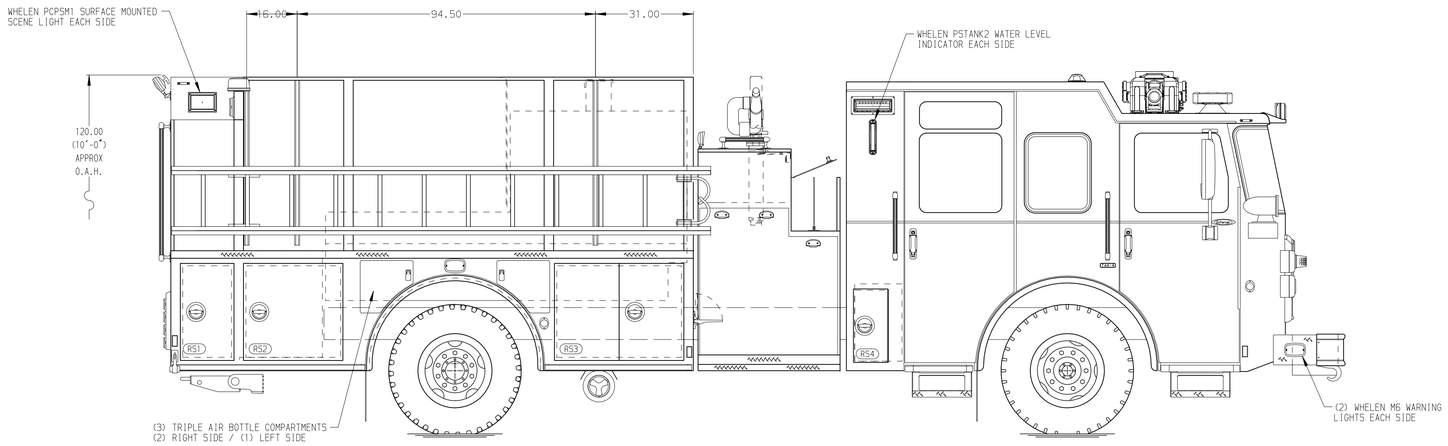

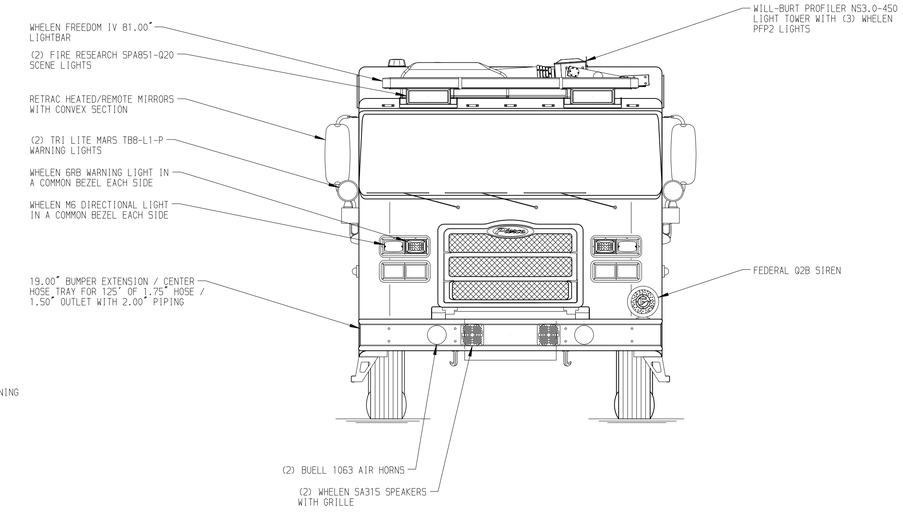

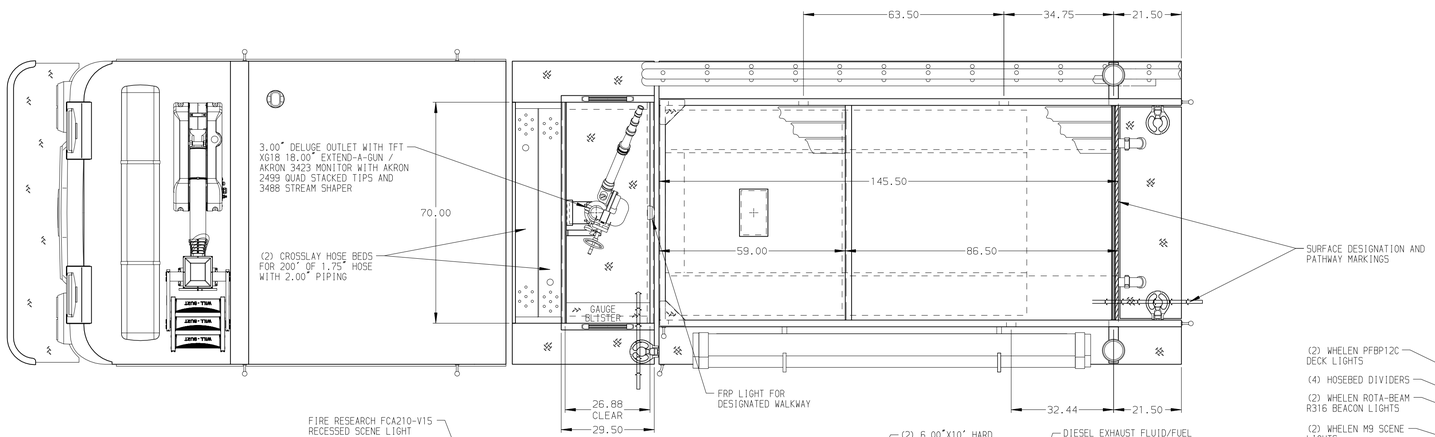

HOSEBED CAPACITIES

1. 200' OF 2.50" D.J. POLY HOSE
2. 300' OF 2.50" D.J. POLY HOSE
3. 1500' OF 5.00" D.J. POLY HOSE
4. 300' OF 1.75" D.J. POLY HOSE
5. 200' OF 1.75" D.J. POLY HOSE

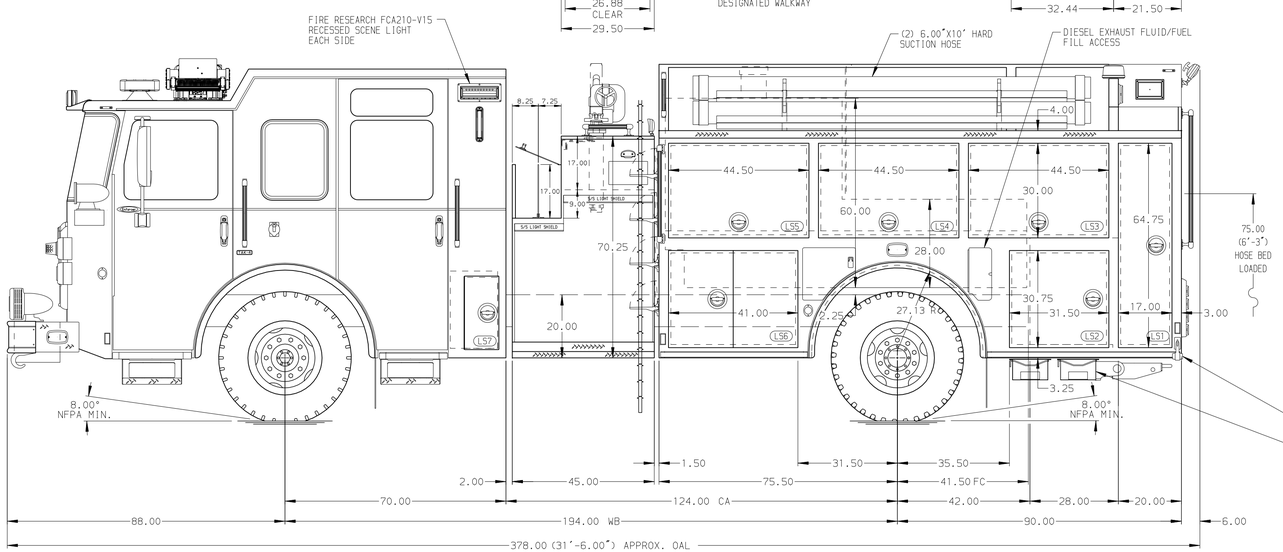

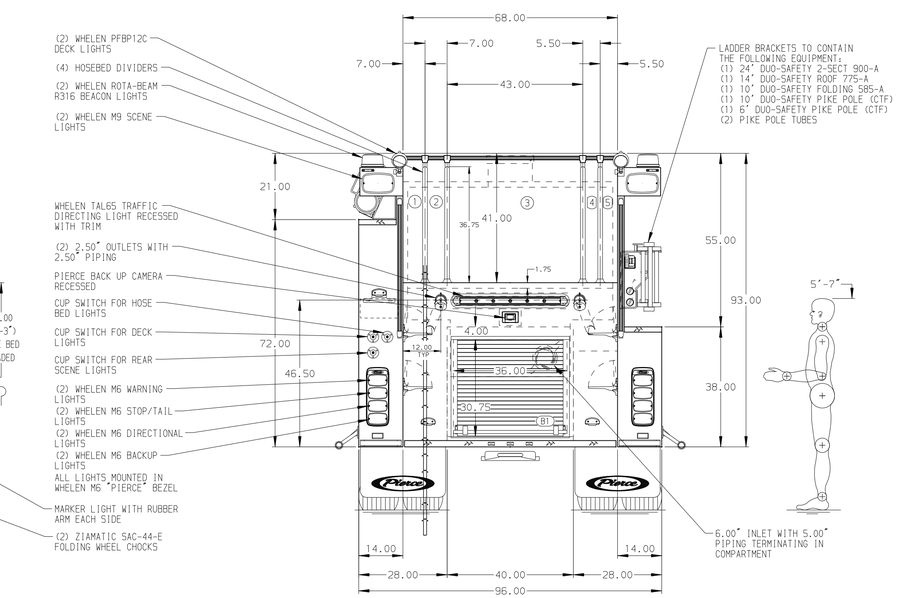

ALUMINUM BODY | MAXIMUM O.A.L. 379.00" | SIDE ROLL AND FRONTAL IMPACT PROTECTION

NOTE

DIMENSIONS SHOWN ARE APPROXIMATE AND ARE SUBJECT TO MINOR DEVIATIONS AS MAY OCCUR OR BE NECESSARY IN CONSTRUCTION.
MINOR DETAILS NOT SHOWN.

1. AIR INLET WITH DISCONNECT FITTING LOCATED IN DRIVER SIDE STEP WELL FORWARD
2. BATTERY CHARGER/AIR COMPRESSOR MOUNTED BEHIND DRIVER SEAT
3. BATTERY CHARGER INDICATOR LOCATED ON DRIVER'S SEAT RISER
4. 120V SHORELINE RECEPTACLE LOCATED ON CAB

REV	DATE	BY	CH
V	26JAN24	BST	PHA

CHASSIS DATA
MAKE: PIERCE
MODEL: ENFORCER

CUSTOMER APPROVAL
APPROVED BY:
DATE:

Pierce MANUFACTURING INC.

TITLE: 1500-D-1000P,145" PUMPER BODY,DELUGE RIGHT SIDE LADDER BRACKETS,45" SIDE CONTROL
FOR: NEW HACKENSACK FIRE DEPARTMENT WAPPINGERS FALLS,NEW YORK
DWG NO.: 38930AD

JOB NO.	SCALE	DRAWN BY	CHECKED BY	SHEET SIZE	SHEET NO.
38930	1:24	BST	PHA	D	1 OF 1
	DATE	17JAN24	22JAN24		