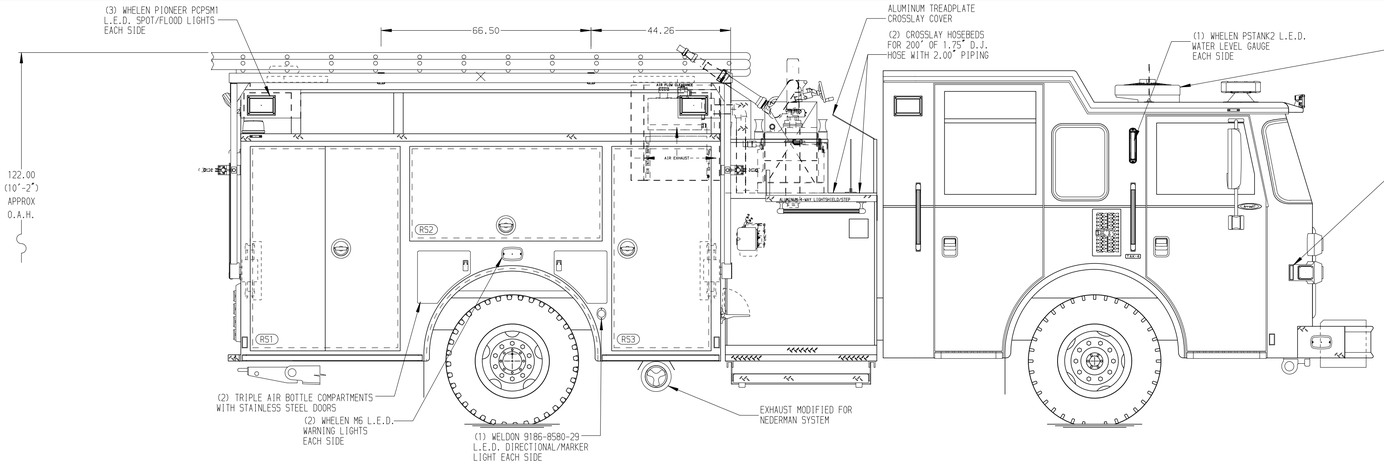

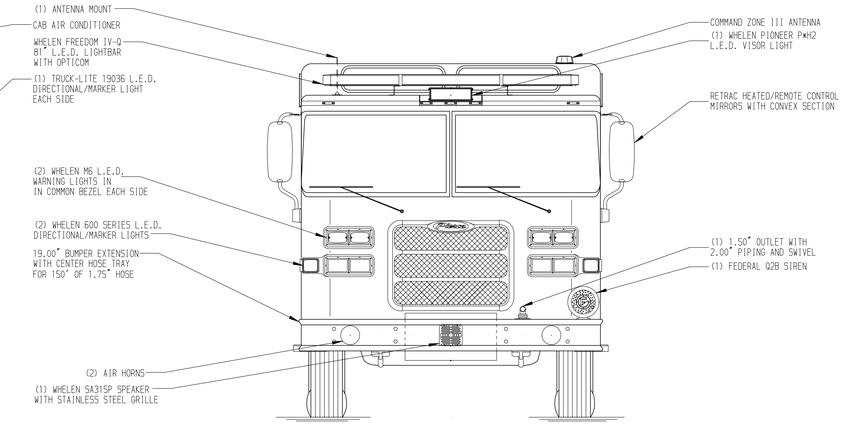

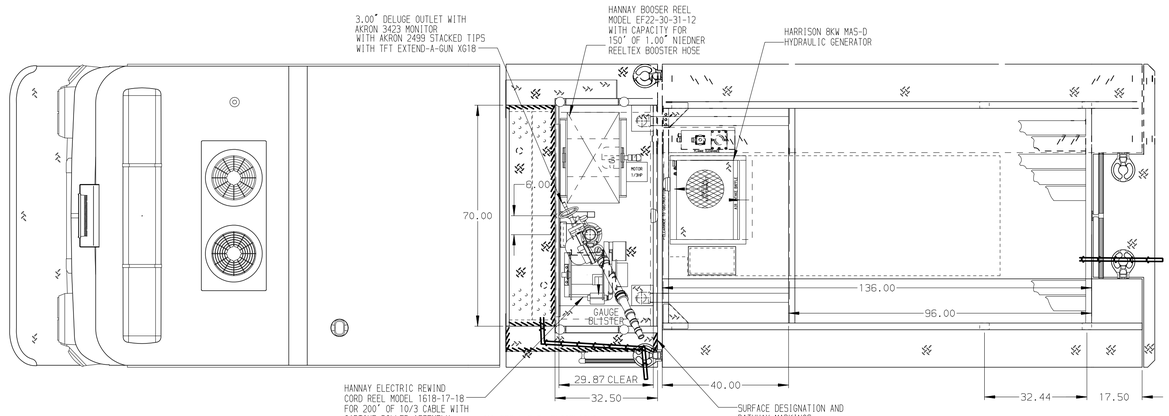

HOSEBED CAPACITIES

1. 300' OF 3.00" D.J. POLY HOSE (PRECONNECTED)
2. 1200' OF 4.00" D.J. POLY HOSE
3. 150' OF 2.50" D.J. POLY HOSE
4. 200' OF 2.50" D.J. POLY HOSE (PRECONNECTED)

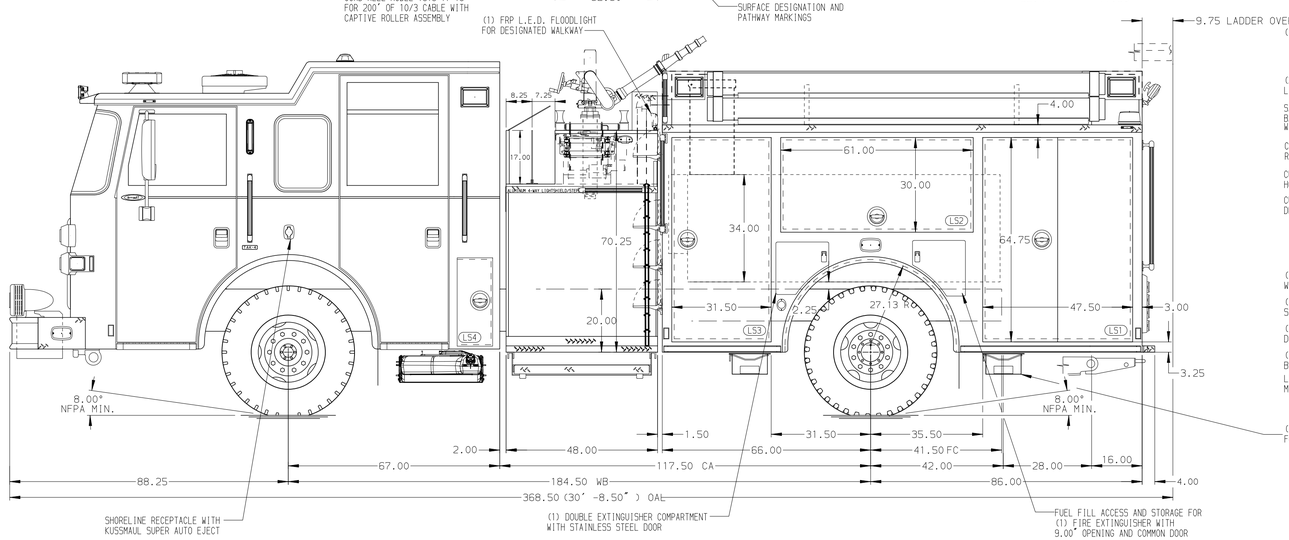

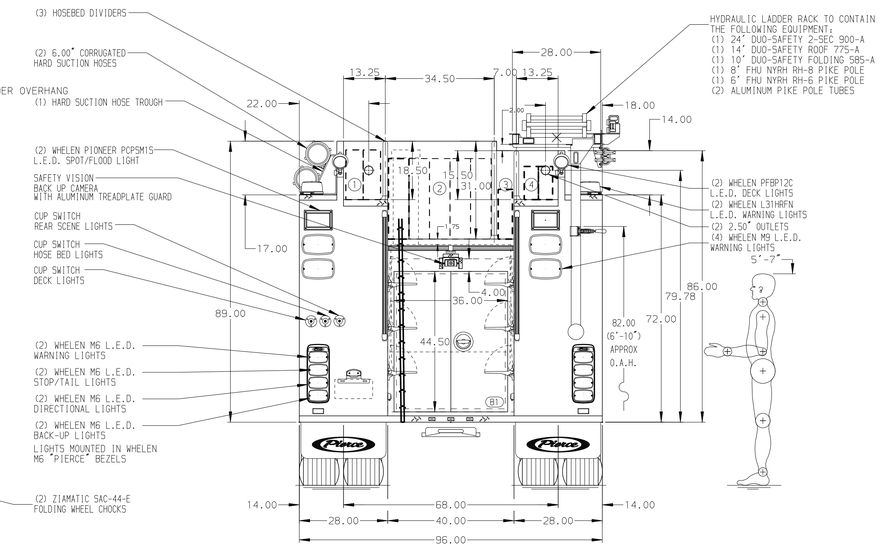

ALUMINUM BODY

SIDE ROLL AND FRONTAL IMPACT PROTECTION

NOTE

DIMENSIONS SHOWN ARE APPROXIMATE AND ARE SUBJECT TO MINOR DEVIATIONS AS MAY OCCUR OR BE NECESSARY IN CONSTRUCTION.
MINOR DETAILS NOT SHOWN.

1. ONSPOT AUTOMATIC TIRE CHAINS TO BE PROVIDED AT REAR
2. ANCHOR PLATE FOR NEDERMAN EXHAUST SYSTEM HOSE LOCATION TBD
3. DEF TANK MOUNTED UNDER CAB ON THE DRIVER'S SIDE
4. BATTERY CHARGER INDICATOR LOCATED PER ORDER

REV	DATE	BY	CH
V	12DEC23	JAM	CSH
V	16OCT23	JAM	CSH
V	12OCT23	JAM	CSH
V	01SEP23	JAM	PHA

CHASSIS DATA
MAKE: PIERCE
MODEL: ARROW XT

Pierce MANUFACTURING INC.

TITLE: 1500-D-500P, 500G WATER, 152" FH & FD
(2) X-LAYS, DELUGE, GENERATOR, HOSE REEL, HYD LADDR

FOR: BOROUGH OF NAUGATUCK FIRE DEPARTMENT
NAUGATUCK, CONNECTICUT

DWG NO.: 38178AD-SH1

JOB NO.	38178
SCALE	1:24
DATE	
DRAWN BY	JAM
	27JUL23
CHECKED BY	PHA
	25AUG23
SHEET SIZE	D
SHEET NO.	1 OF 2