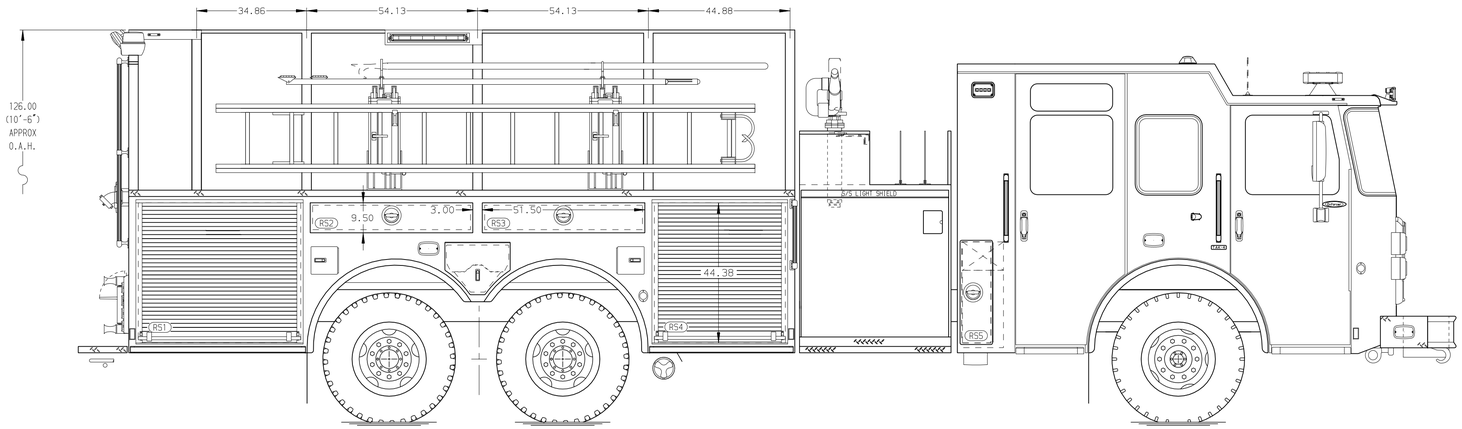


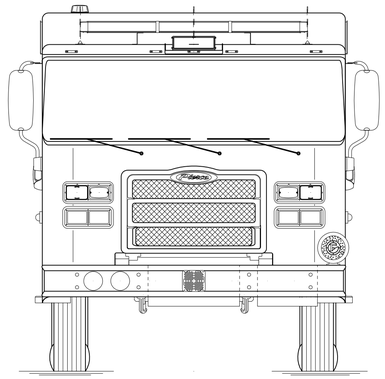

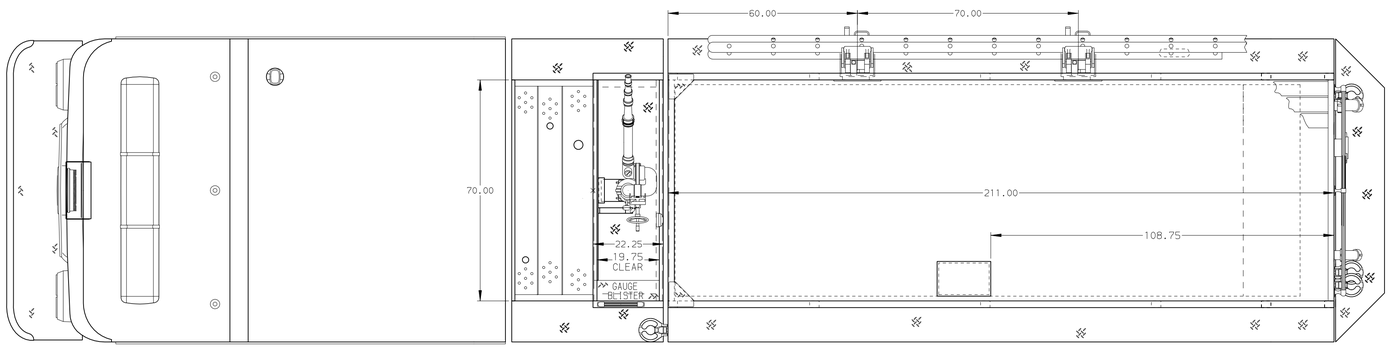


HOSEBED CAPACITIES

1. 1000' OF 5.00" D.J. POLY HOSE
2. 250' OF 2.50" D.J. POLY HOSE

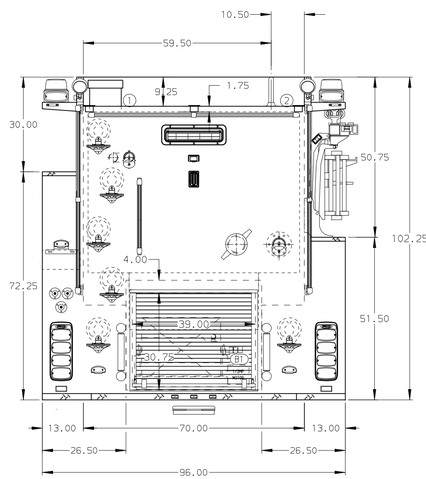


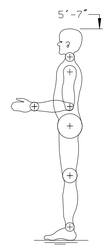


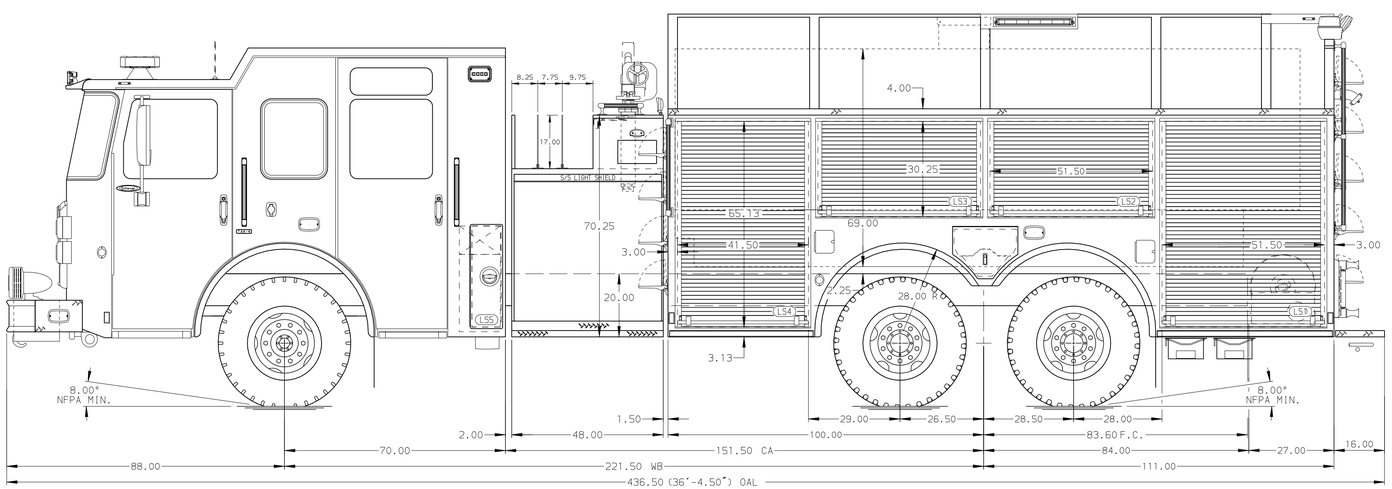


ALUMINUM BODY

SIDE ROLL AND FRONTAL IMPACT PROTECTION

NOTE

DIMENSIONS SHOWN ARE APPROXIMATE AND ARE SUBJECT TO MINOR DEVIATIONS AS MAY OCCUR OR BE NECESSARY IN CONSTRUCTION.
MINOR DETAILS NOT SHOWN.

| REV | DATE | BY | CH |
|---|---|---|---|
| - | - | - | - |

CUSTOMER APPROVAL

APPROVED BY: _____

DATE: _____

CHASSIS DATA

MAKE: PIERCE

MODEL: ENFORCER

Pierce MANUFACTURING INC.

TITLE: 2000-D-3000 GAL POLY, 211" FH FDLER LEFT SIDE, 3/4 BROOM RIGHT SIDE, ZICO LADDER RACK, (3) CROSSLAYS

FOR: MASTIC BEACH FIRE DEPARTMENT BID# 767
FIREMATIC SUPPLY CO, INC. PETER HANRATTY

DWG NO. 05-0011

| JOB NO. | PRELIM |
|---|---|
| SCALE 1:24 | DATE |
| DRAWN BY LST | 17JAN22 |
| CHECKED BY NPA | 18JAN22 |
| SHEET SIZE D | SHEET NO. 1 OF 1 |