RIGHT SIDE COMPARTMENTS CONTAIN THE FOLLOWING:

COMPARTMENT RS1 CONTAINS:
- (1) VERTICAL COMPARTMENT DIVIDER
- (1) STD DEPTH ADJ SLIDE OUT TRAY
- (1) STD DEPTH ADJ SLIDE OUT/TILT TRAY
- (2) STD DEPTH ADJ SLIDE OUT TOOLBOARDS
- (1) SLIDE OUT OIL DRY HOPPER
- (1) 15/20A,120V 4-PLACE RECEPTACLE
-
-

COMPARTMENT RS2 CONTAINS:
- (3) STD DEPTH ADJ SLIDE OUT TOOLBOARDS
- (1) 15/20A,120V 4-PLACE RECEPTACLE
-
-

COMPARTMENT RS3 CONTAINS:
- (1) STD DEPTH ADJ SLIDE OUT TRAY
- (1) 1/2 DEPTH ADJ SLIDE OUT/TILT TRAY
- (1) FLOOR MOUNTED TRAY
- (1) 15/20A,120V 4-PLACE RECEPTACLE
-
-
-

COMPARTMENT RS4 CONTAINS:
- (1) CAB LIFT CONTROLLER
- (1) 48"DP ADJ SLIDE OUT TRAY
- (1) 1/2 DEPTH ADJ SLIDE OUT/TILT TRAY
- (1) FLOOR MOUNTED TRAY
- (1) ELECTRIC CORD REEL WITH 200' OF 10/3 CORD
- (1) 15/20A,120V 4-PLACE RECEPTACLE
-
-

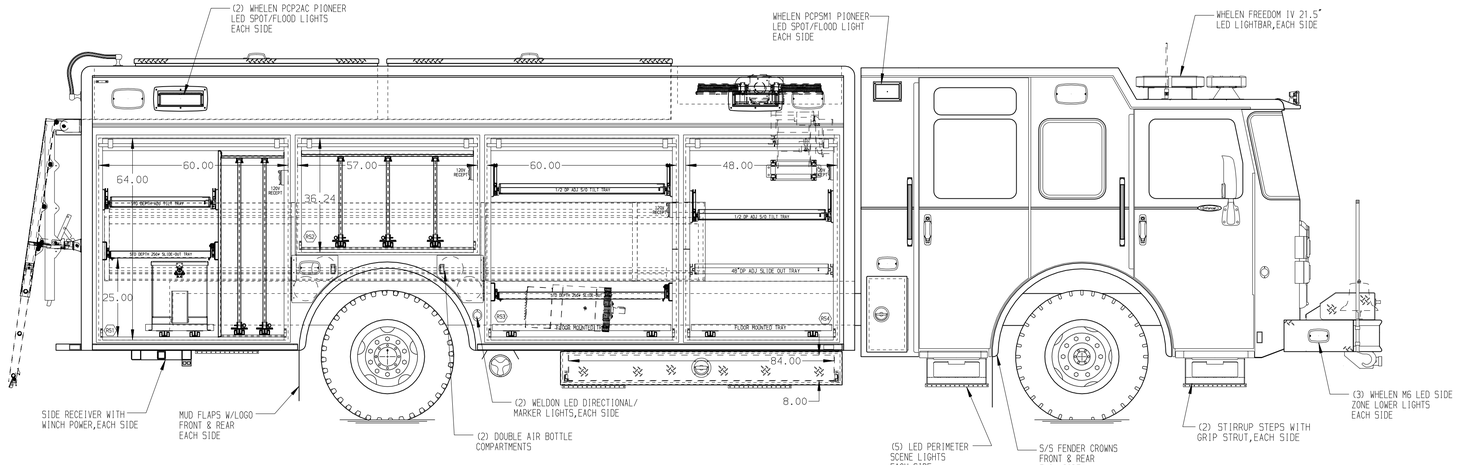

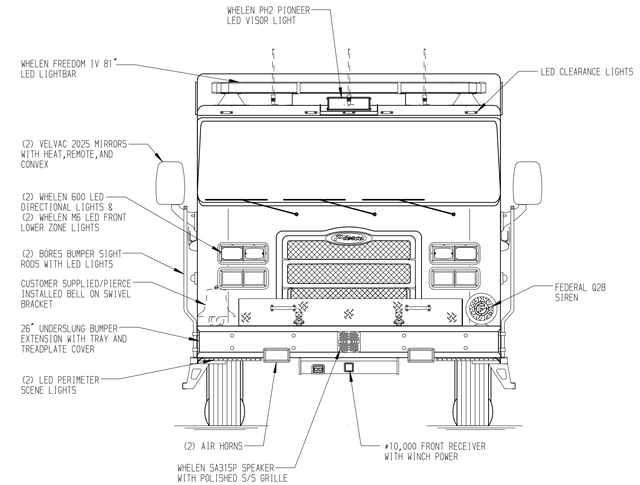

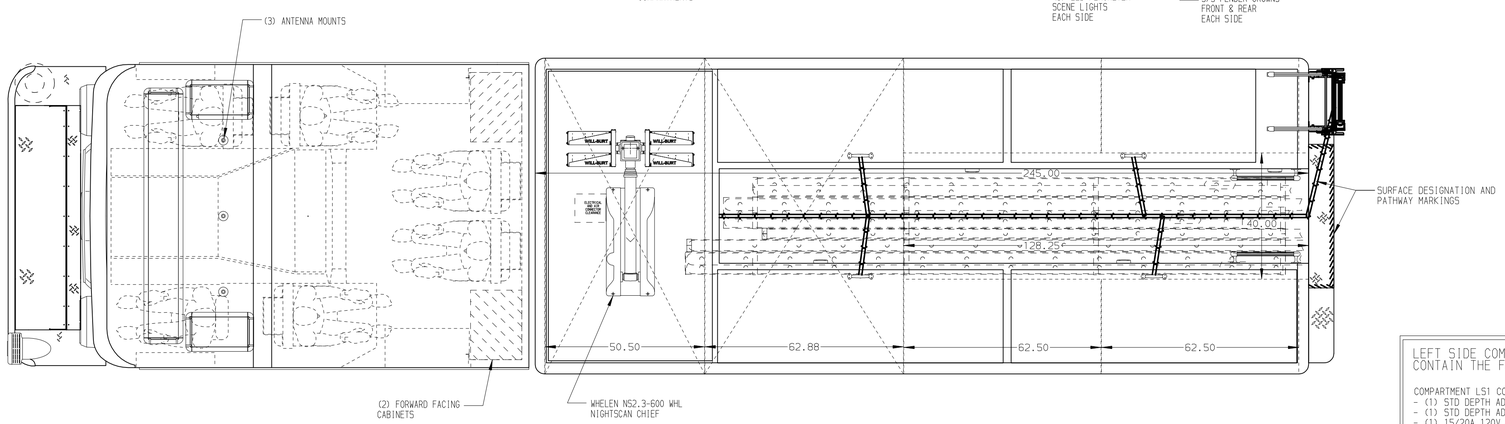

LEFT SIDE COMPARTMENTS CONTAIN THE FOLLOWING:

COMPARTMENT LS1 CONTAINS:
- (1) STD DEPTH ADJ SLIDE OUT TRAY
- (1) STD DEPTH ADJ SLIDE OUT/TILT TRAY
- (1) 15/20A,120V 4-PLACE RECEPTACLE
- (1) 30A,240V T.L. RECEPTACLE
- (2) HYDRAULIC REELS WITH 100' OF HOSE EACH
-
-

COMPARTMENT LS2 CONTAINS:
- (1) RACK FOR 4 AIR BAGS
- (1) STD DEPTH ADJ SLIDE OUT TOOLBOARD
- (2) POLY TOOL BOXES
- (1) 15/20A,120V 4-PLACE RECEPTACLE
- (1) LOW PRESSURE AIR REEL W/150' OF HOSE
-

COMPARTMENT LS3 CONTAINS:
- (1) VERTICAL COMPARTMENT DIVIDER
- (2) STD DEPTH ADJ SLIDE OUT TRAYS
- (1) 1/2 DEPTH ADJ SLIDE OUT/TILT TRAY
- (2) STD DEPTH ADJ SLIDE OUT TOOLBOARDS
- (6) POLY TOOL BOXES
- (1) 15/20A,120V 4-PLACE RECEPTACLE
-
-

COMPARTMENT LS4 CONTAINS:
- (1) IOTA 75A BATTERY CHARGER
- (1) VERTICAL COMPARTMENT DIVIDER
- (2) STANDARD DEPTH ADJ SHELVES
- (1) STD DEPTH ADJ SLIDE OUT TRAY
- (1) STD DEPTH ADJ SLIDE OUT/TILT TRAY
- (1) 1/2 DEPTH ADJ SLIDE OUT/TILT TRAY
- (1) CIRCUIT BREAKER PANEL
- (1) GENERATOR METER PANEL
- (1) NIGHTSCAN CONTROLLER
- (1) ELECTRIC CORD REEL WITH 200' OF 10/3 CORD
- (1) 15/20A,120V 4-PLACE RECEPTACLE
-
-

REAR COMPARTMENT CONTAINS THE FOLLOWING:

COMPARTMENT B1 CONTAINS:
- (1) 122"DP ADJ SLIDE OUT TRAY WITH (2) TOOLBOARDS
- (1) HORIZONTAL FLOOR EXTENSION
- (1) REAR RACK TO CONTAIN:
  - (1) 35' 3-SECTION LADDER
  - (1) 28' 2-SECTION LADDER
  - (1) 24' 2-SECTION LADDER
  - (1) 16' ROOF LADDER
  - (1) 14' ROOF LADDER
  - (1) 10' FOLDING LADDER
  - (6) PIKE POLES
- (1) ROLLER REAR OF LADDER STORAGE
-
-

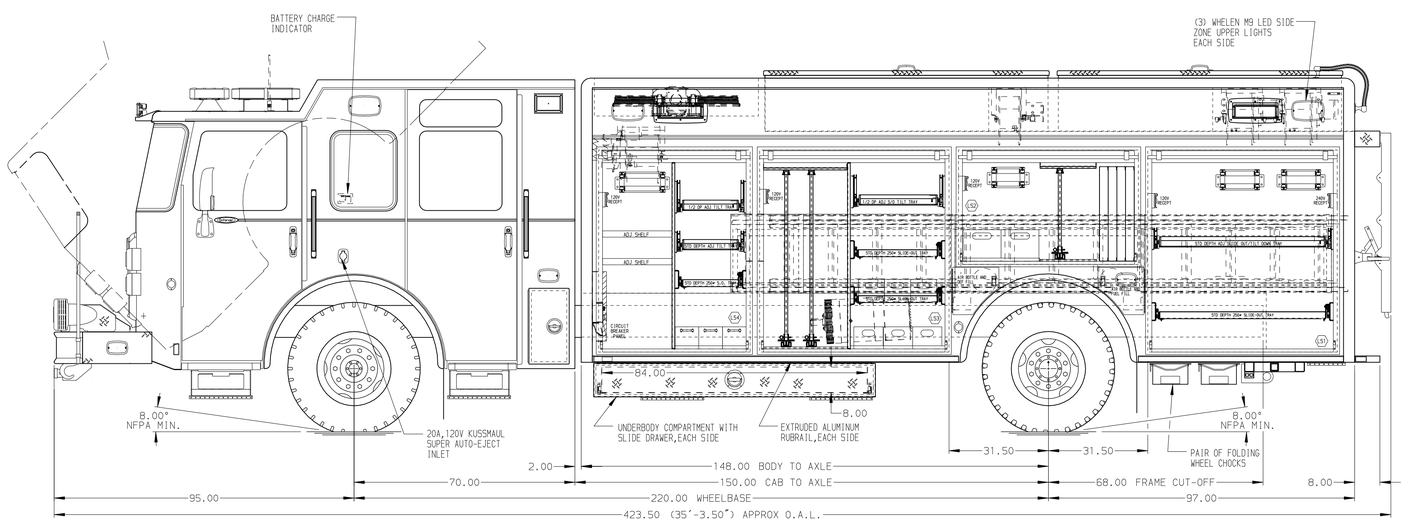

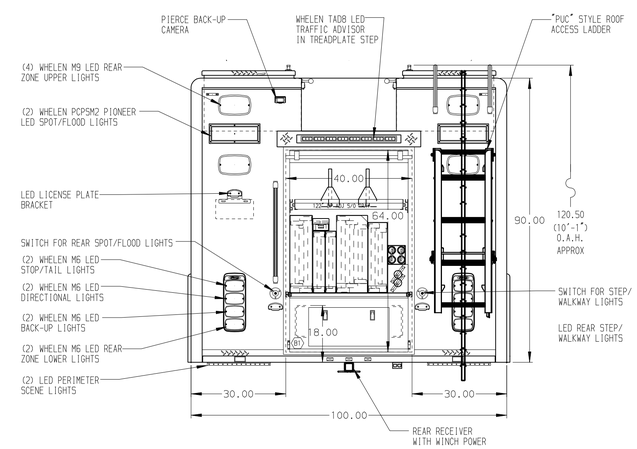

NOTE

DIMENSIONS SHOWN ARE APPROXIMATE AND ARE SUBJECT TO MINOR DEVIATIONS AS MAY OCCUR OR BE NECESSARY IN CONSTRUCTION.
MINOR DETAILS NOT SHOWN.

NOTES:
1. ONAN 25kW SINGLE PHASE PTO DRIVEN GENERATOR LOCATED BETWEEN THE FRAME RAILS
2. ONSPOT AUTOMATIC TIRE CHAINS
3. WARN #10,000 PORTABLE WINCH
4. POLISHED S/S SCUFFPLATES ON CAB AND CREW CAB DOOR JAMBS
5. FLOOR IN CAB AND CREW CAB TO BE PADDED RUBBER
6. PULL STRAPS ON ALL BODY ROLL-UP DOORS
7. PIERCE LED LIGHT STRIPS IN ALL BODY AND HATCH COMPARTMENTS
8. 15/20A,120V 4-PLACE RECEPTACLE LOCATED ON THE DRIVER'S SIDE OF THE ENGINE TUNNEL

SIDE ROLL AND FRONTAL IMPACT PROTECTION

CLEAR DOOR WIDTH KEY

AMDOR ROLL UP DOORS:	-2 1/4"
GORTITE ROLL UP DOORS:	-2 1/2"
PIERCE DOUBLE LAP DOORS:	-4 1/4"
PIERCE LIFT-UP LAP DOORS:	-1 1/2"
(EX: 60"F-F - 2 1/4"= 57 3/4" CLEAR) (F-F)= FRAME TO FRAME	

REV	DATE	BY	CH
V	180CT18	DHE	CDK

CHASSIS DATA
MAKE: PIERCE
MODEL: EN7010

CUSTOMER APPROVAL
APPROVED BY:
DATE:

Pierce MANUFACTURING INC.

TITLE: HEAVY DUTY RESCUE NON-WALKIN
FOR: FORT HUNTER FIRE DEPARTMENT FORT HUNTER WILLIAM KRUG
DWG NO.: 32965AD

JOB NO.	32965
SCALE	1:24
DATE	050CT18
DRAWN BY	DHE
CHECKED BY	CDK 050CT18
SHEET SIZE	D
SHEET NO.	1 OF 1