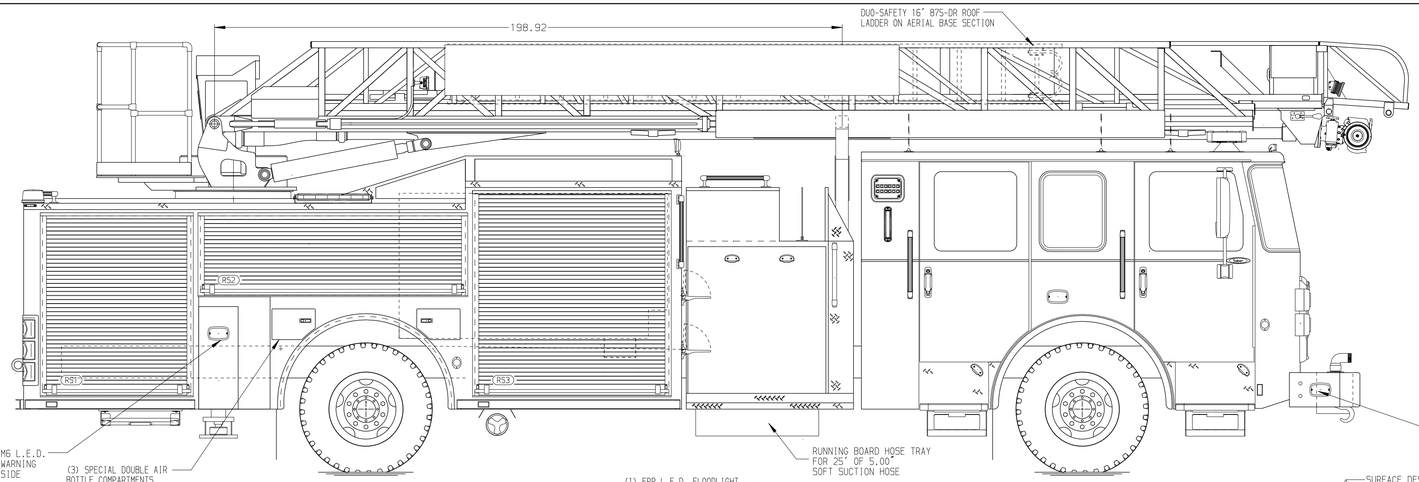


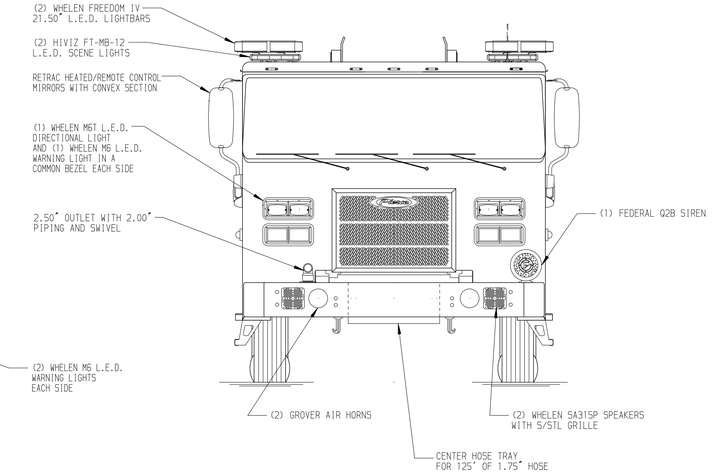


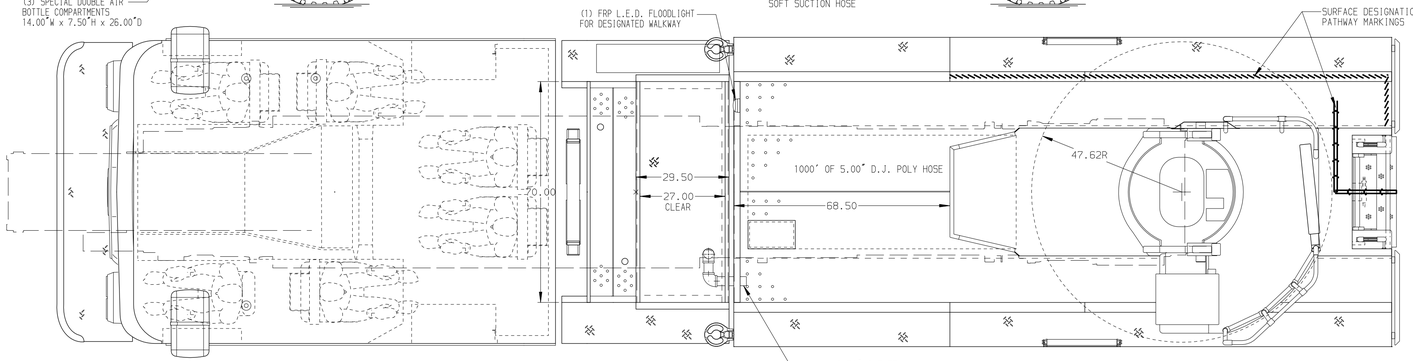


| BODY | WATER TANK |
|---|---|
| 75' HAL Aluminum Body | 500 Gallon Poly Water Tank |
| COMPT,LEFT SIDE FRONT | Foam System |
| Full Height Rollup Forward | Foam System Not Required |
| COMPT,LEFT SIDE REAR | Foam Cell |
| Full Height Rollup Rearward | Foam Cell Not Required |
| COMPT,RIGHT SIDE FRONT | |
| Full Height Rollup Forward | |
| COMPT,RIGHT SIDE REAR | |
| Full Height Rollup Rearward | |

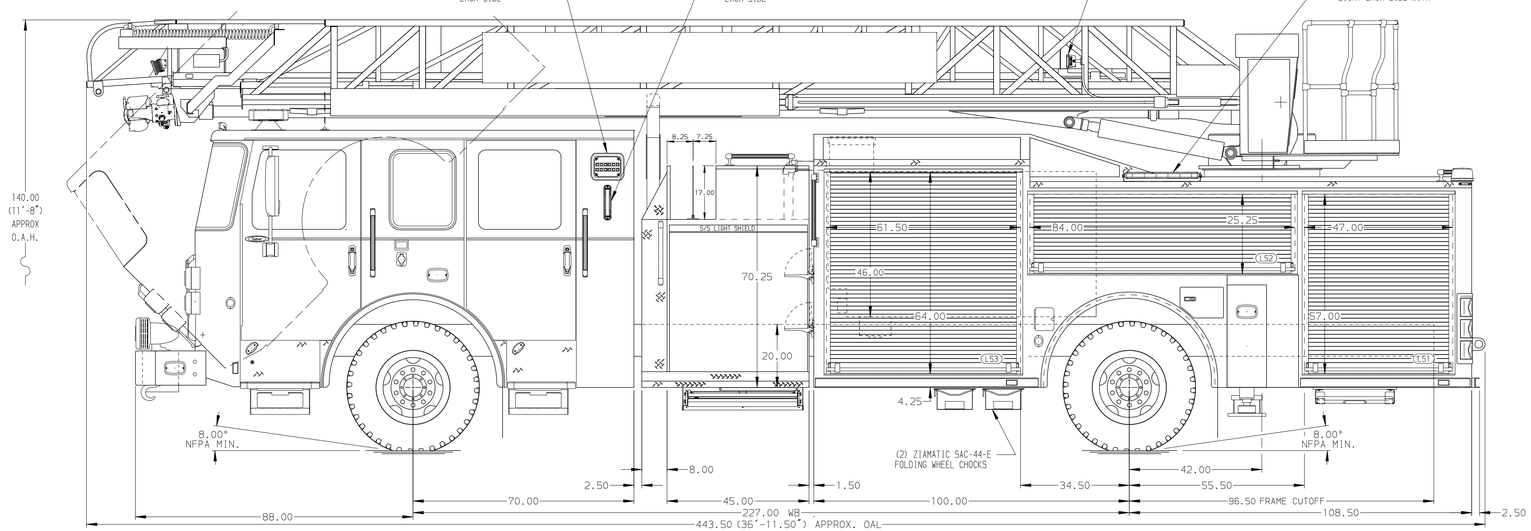


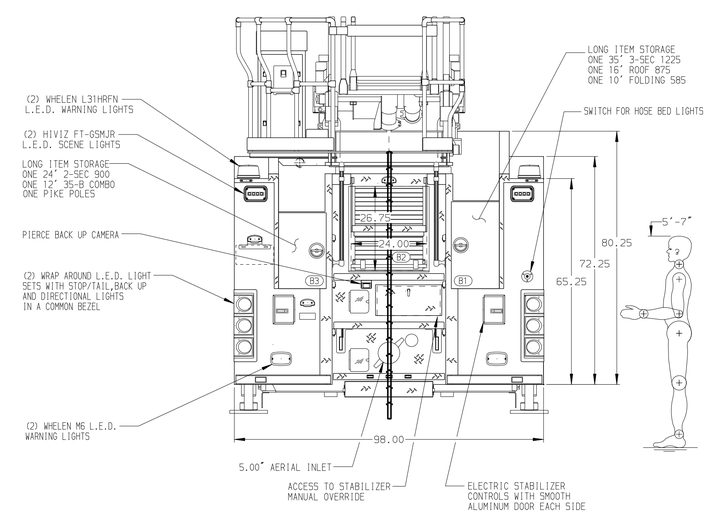


| CHASSIS | CAB | AXLE,FRONT,CUSTOM | TRANSMISSION | PUMPHOUSE | CROSSLAYS,1.50" | SPEEDLAYS |
|---|---|---|---|---|---|---|
| Saber FR Chassis | 7000 Saber Cab | 20,000 Lb Dana Axle | ALLison 5th Gen, 3000 EVS P | 45° Control Zone Side Mount | (2) 1.50" Standard Capacity | Speedlays Not Required |
| ENGINE | BUMPER | AXLE,REAR | | PUMP | CROSSLAYS,2.50" | GENERATOR |
| 450 HP Cummins L9 Engine | 19" Extended Painted Steel | 33,500 Lb Meritor Axle | | 1500 GPM Waterous CSU | 2.50" Crosslay Not Required | Generator Not Required |

NOTE

DIMENSIONS SHOWN ARE APPROXIMATE AND ARE SUBJECT TO MINOR DEVIATIONS AS MAY OCCUR OR BE NECESSARY IN CONSTRUCTION.
MINOR DETAILS NOT SHOWN.

1. RUNG LIGHTING ON AERIAL LADDER
2. SHORELINE RECEPTACLE WITH KUSSMAUL SUPER AUTO-EJECT LOCATED ON DRIVER SIDE OF THE CAB
3. AIR INLET WITH DISCONNECT COUPLING IN THE DRIVER SIDE STEPWELL
4. BATTERY CHARGER LOCATED BEHIND DRIVER SEAT
5. BATTERY CHARGE INDICATOR LOCATED ON DRIVER SIDE OF THE CAB
6. DUAL L.E.D. LIGHT STRIPS LOCATED IN HOSE BED
7. FIVE ADJUSTABLE SHELVES IN COMPARTMENTS PER SHOP ORDER
8. THREE FLOOR MOUNTED SLIDE-OUT TRAYS LOCATED IN COMPARTMENTS PER SHOP ORDER
9. 7.00" AERIAL LIMITED RETRACTION
10. 1.50" RAISED AERIAL PEDESTAL
11. 1500 GPM HIGH FLOW WATERWAY
12. LIFTING EYE RESCUE ATTACHMENT AT AERIAL TIP

| REV | DATE | BY | CH |
|---|---|---|---|
| 1 | 13APR22 | LWE | THS |

CHASSIS DATA
MAKE: PIERCE
MODEL: SABER FR

Pierce MANUFACTURING INC.

TITLE: 75 AERIAL LADDER & BODY ASSEMBLY (HAL)
FOR: PIERCE FIELD UNIT APPLETON, WI
DWG NO.: 37851AD

JOB NO. 37851
SCALE 1:24
DATE
DRAWN BY LWE 26JAN22
CHECKED BY THS 27JAN22
SHEET SIZE D
SHEET NO. 1 OF 1

View File Created 14-APR-2022 11:30:33