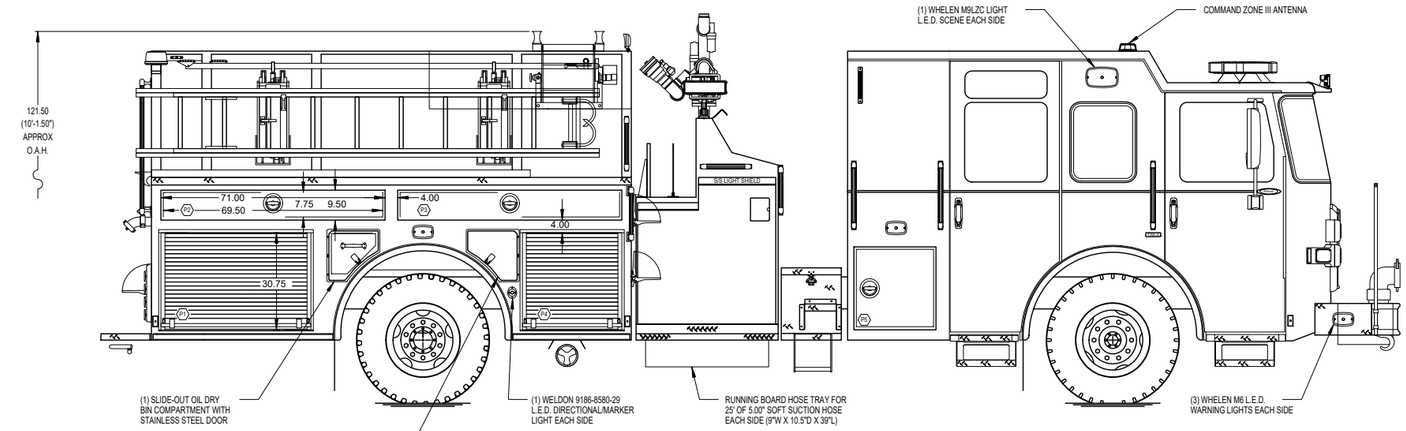

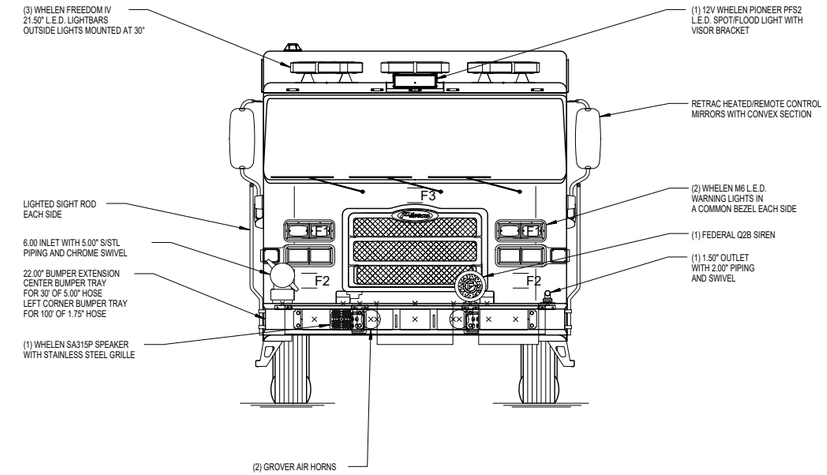

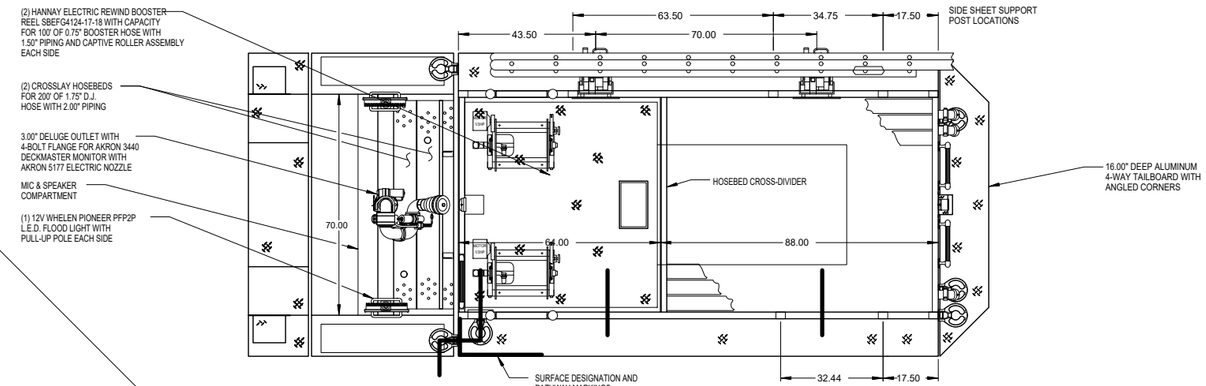

HOSEBED CAPACITIES

1. 250' OF 1.75" D.J. HOSE (ABOVE)
   250' OF 2.50" D.J. HOSE (BELOW)
2. 1000' OF 5.00" D.J. HOSE
3. 800' OF 3.00" D.J. HOSE
4. 250' OF 1.75" D.J. HOSE (ABOVE)
   250' OF 2.50" D.J. HOSE (BELOW)

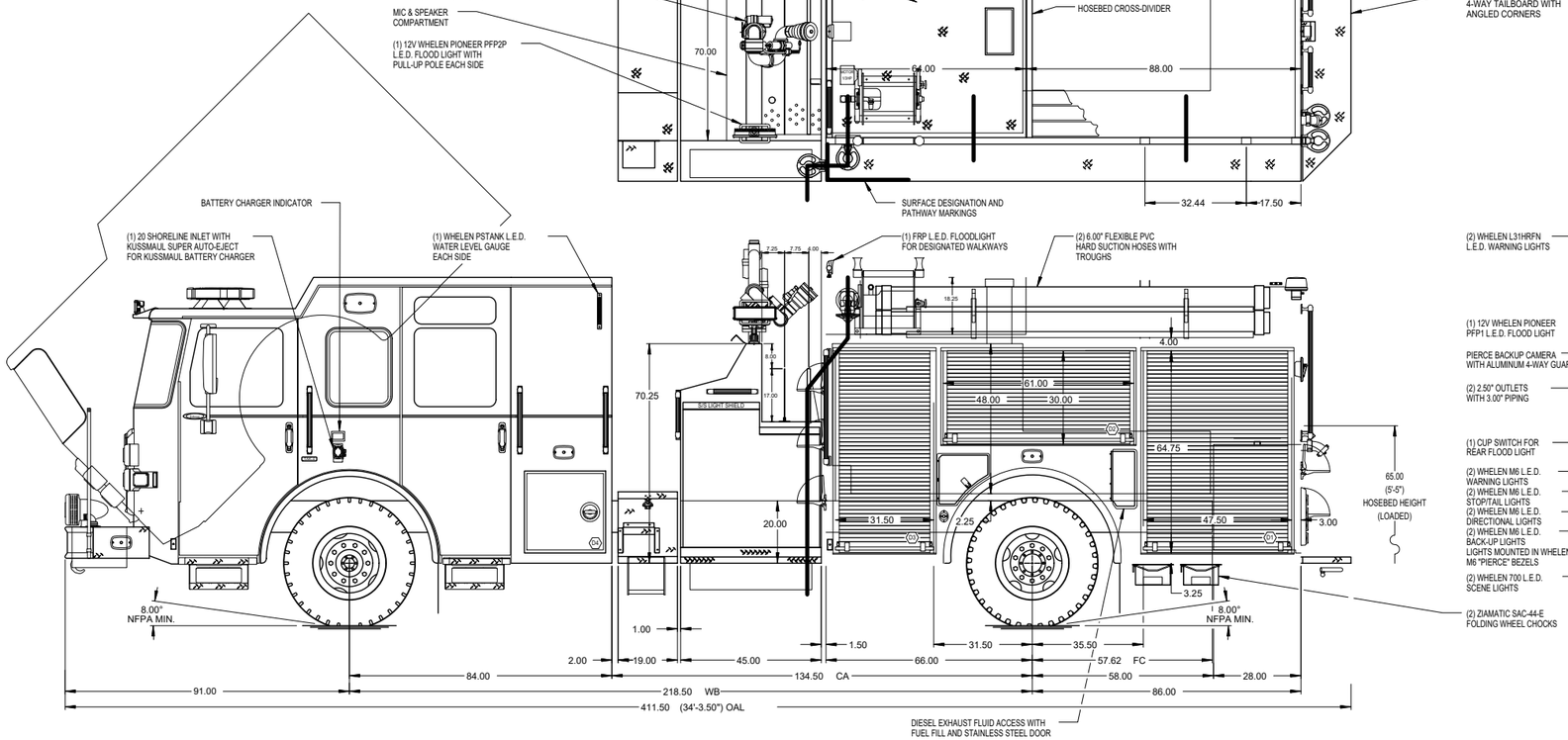

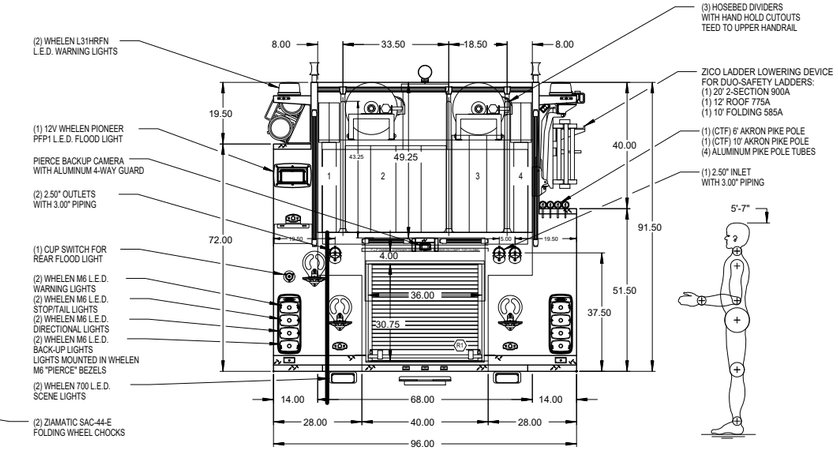

NOTE

DIMENSIONS SHOWN ARE APPROXIMATE AND ARE SUBJECT TO MINOR DEVIATIONS AS MAY OCCUR OR BE NECESSARY IN CONSTRUCTION.
MINOR DETAILS NOT SHOWN.

1. ALUMINUM TREADPLATE ON CAB RAISED ROOF ONLY
2. KUSSMAUL 1200 BATTERY CHARGER LOCATED BEHIND DRIVER SEAT
3. AIR INLET/OUTLET WITH DISCONNECT FITTING LOCATED ON D.S. PUMP PANEL
4. ONE ADJUSTABLE FULL WIDTH/DEPTH TRAY IN COMPARTMENTS D2, P1 & P4; TWO IN D1 & D3
5. ONE FLOOR MOUNTED SLIDE-OUT TRAY IN COMPARTMENT D3

REV	DATE	BY	CH

CHASSIS DATA	
MAKE	PIERCE
MODEL	ENFORCER
TITLE	2000-D-750 GAL POLY, 152" FH DS, 3/4 HGHT BROOM PS TOP MOUNT, (2) XLAYS, ZICO LADDER RACK, (2) BOOSTER REELS
FOR	EAST ISLIP FIRE DISTRICT EAST ISLIP, NEW YORK
DWG NO.	–

Pierce MANUFACTURING INC.

JOB NO.	-
SCALE	1:24
DATE	
DRAWN BY	MZI
DATE	13JAN2022
CHECKED BY	-
	-
SHEET SIZE	D
SHEET NO.	1 OF 1