PUMPER

BODY
Long Aluminum 2nd Gen Pumper

CHASSIS
Enforcer Chassis

CHASSIS

AXLE,FRONT,CUSTOM
22,800 lb TAK-4 Axle

AXLE,REAR
31,000 lb Dana Axle

ENGINE
450 HP Cummins L9 Engine

TRANSMISSION
Allison 5th Gen, 3000 EVS P

BUMPER
19" Extended Stainless Steel

CAB
7010 Enforcer Cab

BODY

WATER TANK
750 Gallon Poly Water Tank

COMPT,PUMPER,REAR
37.75" FF Rollup Rear Compt

COMPT,PUMPER,LEFT SIDE
161" Rollup Full Height Front & Rear FDLER

COMPT,PUMPER,RIGHT SIDE
161" Rollup Low FDLER

FIRE SUPPRESSION

PUMPHOUSE
45" Control Zone Side Mount

PUMP
2000 GPM Hale QMAX-200

CROSSLAYS,1.50"
(3) 1.50" Standard Capacity

CROSSLAYS,2.50"
2.50" Crosslay Not Required

SPEEDLAYS
Speedlays Not Required

GENERATOR
Generator Not Required

Foam System
Foam System Not Required

Foam Cell
Foam Cell Not Required

Side Roll and Frontal Impact Protection

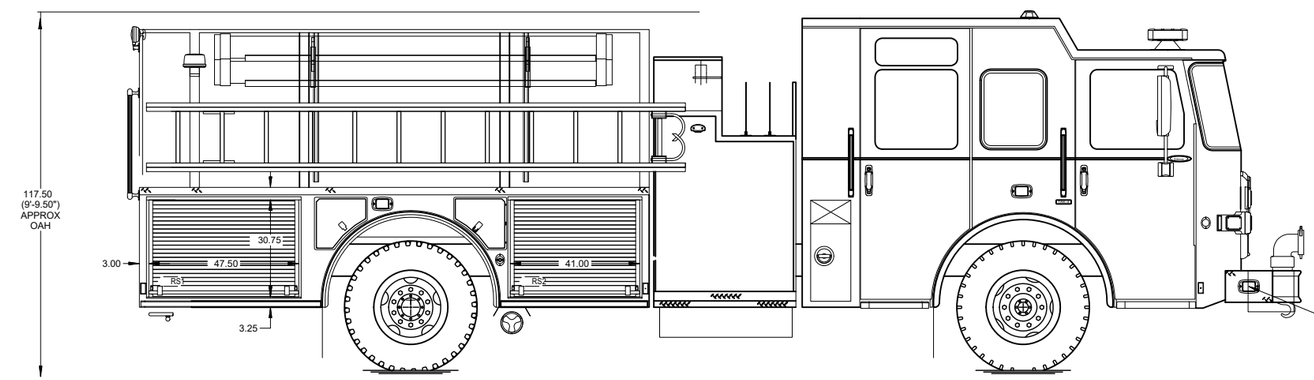

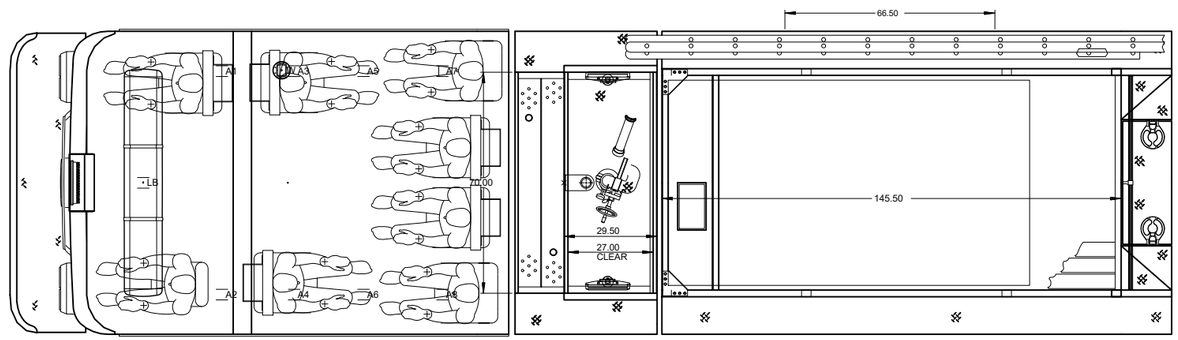

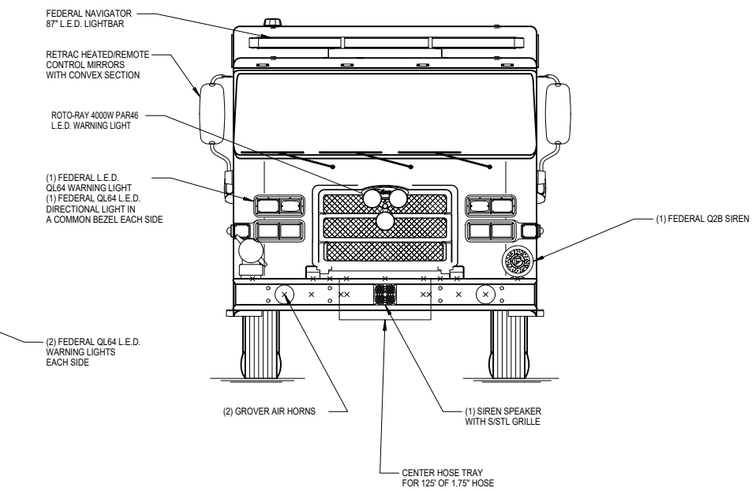

HOSEBED CAPACITY
BED 1

4000' OF 5.00" D.J. POLY HOSE

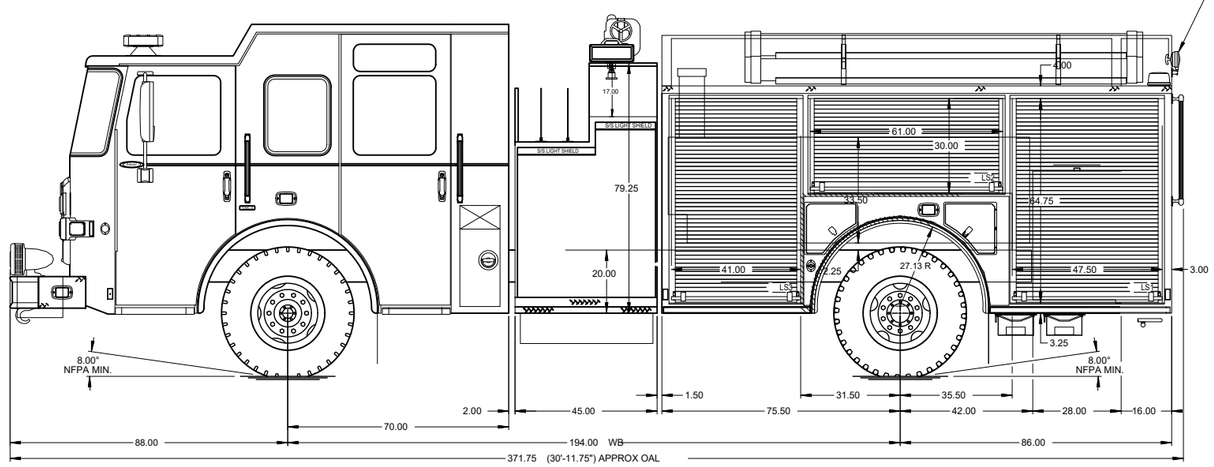

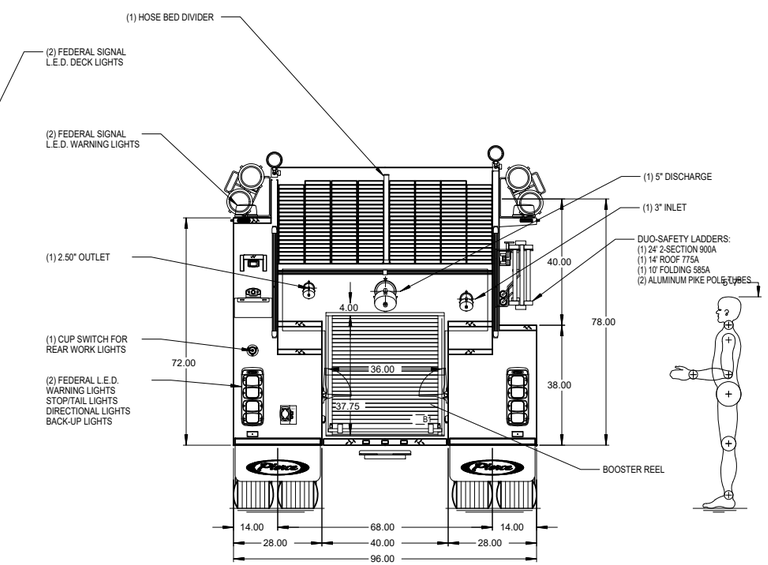

NOTE

DIMENSIONS SHOWN ARE APPROXIMATE AND ARE SUBJECT TO MINOR DEVIATIONS AS MAY OCCUR OR BE NECESSARY IN CONSTRUCTION.
MINOR DETAILS NOT SHOWN.

CUSTOMER APPROVAL

APPROVED BY: _____

DATE: _____

Pierce MANUFACTURING INC.

REV	DATE	BY	CH
-	-	-	-

CHASSIS DATA	TITLE	EAST HAMPTON HOSE - HALE 2000 - 750 G -	JOB NO. -
MAKE PIERCE	FOR	EAST HAMPTON FIRE DEPT EAST HAMPTON, NEW YORK	SCALE 1:24 / DATE
MODEL -	DWG NO.	Rev 2	DRAWN BY MZI / 25JUN2021
			CHECKED BY - / -
			SHEET SIZE D / SHEET NO. 1 OF 1