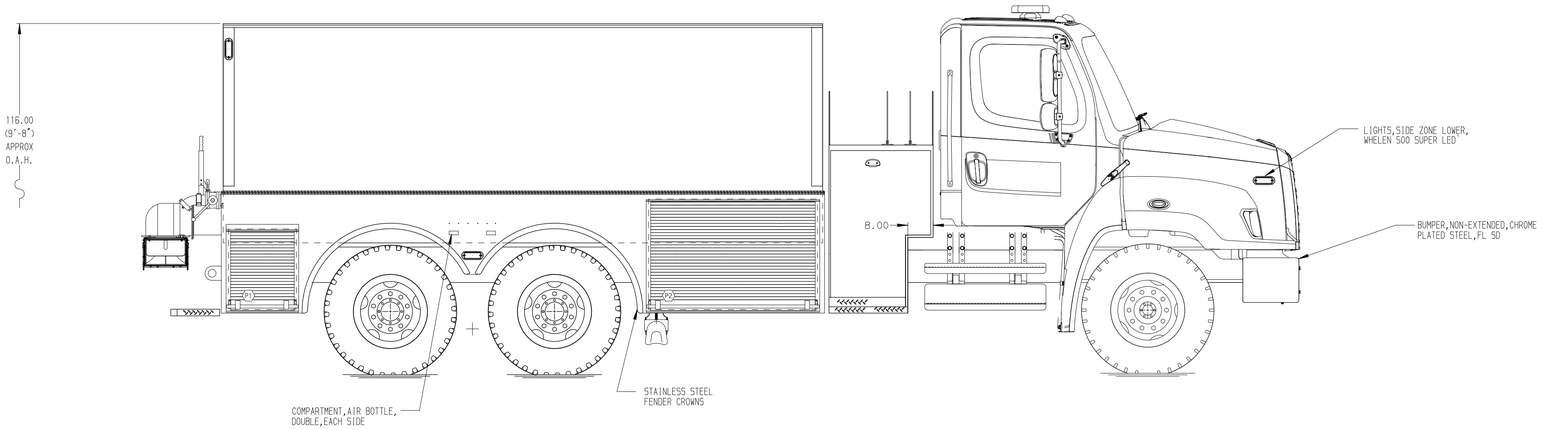

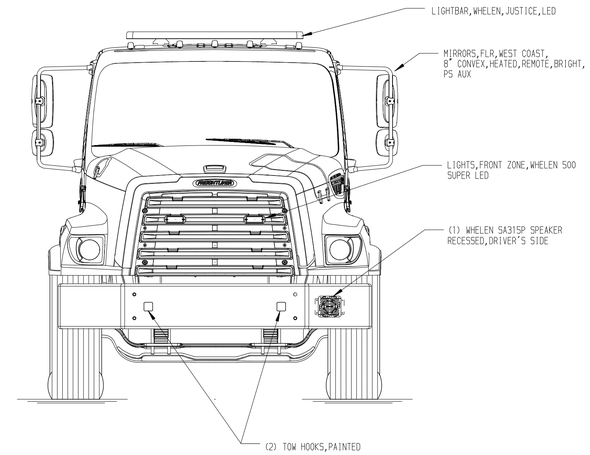

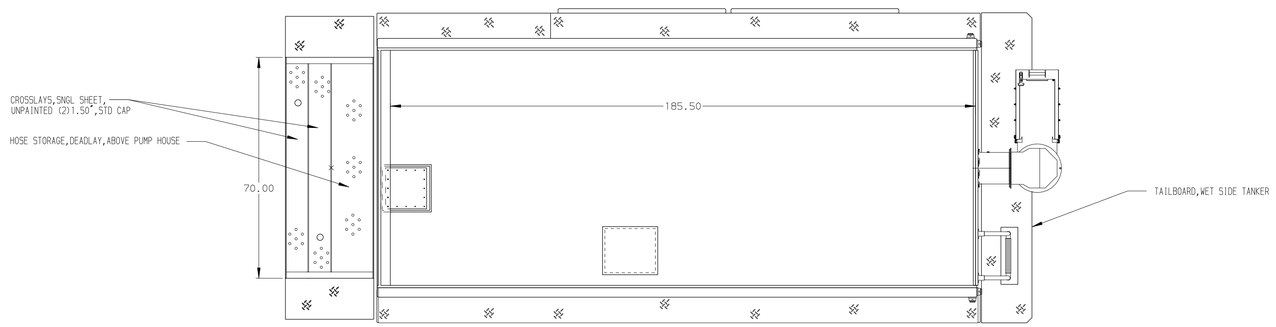

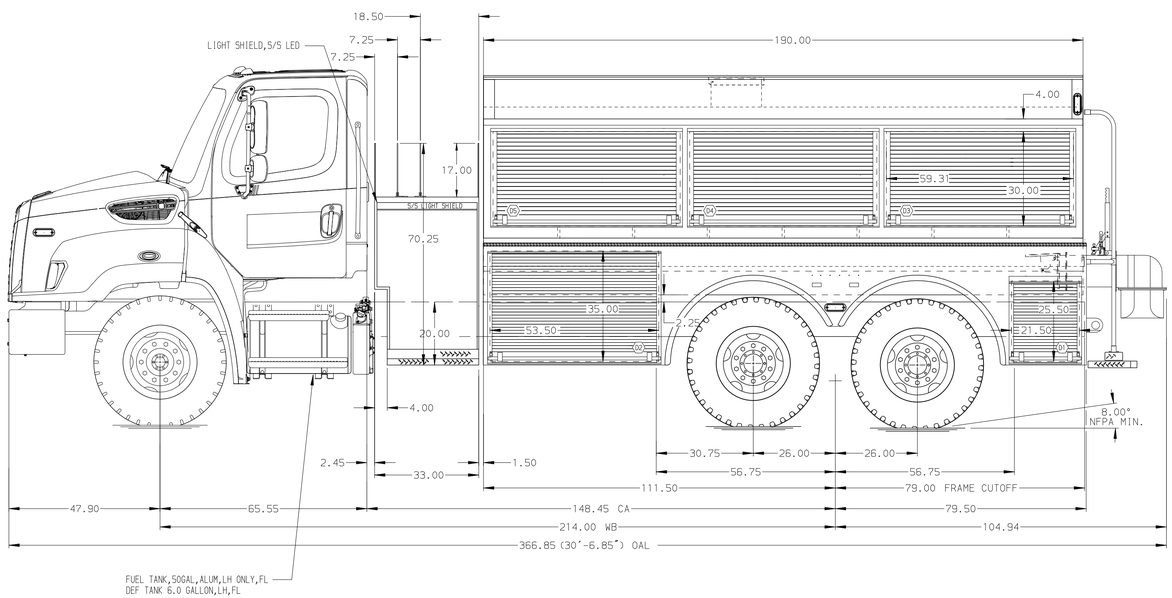

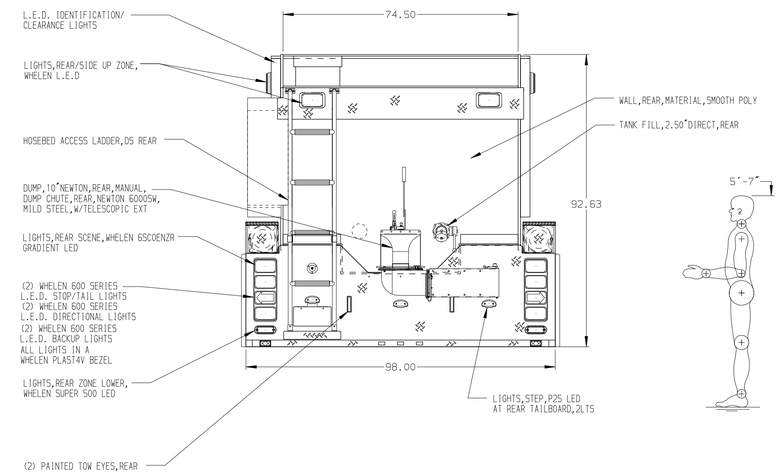

ALUMINUM BODY

NOTE

DIMENSIONS SHOWN ARE APPROXIMATE AND ARE SUBJECT TO MINOR DEVIATIONS AS MAY OCCUR OR BE NECESSARY IN CONSTRUCTION.
MINOR DETAILS NOT SHOWN.

1. AIR INLET LOCATED DS PUMP PANEL
2. EXHAUST SYSTEM,HORIZONTAL,RH STEP MOUNTED DPF/SCR,2013 FL
3. BATTERY CHARGING RECEPTACLE LOCATED ON THE DRIVER SIDE PUMP PANEL
4. PERIMETER SCENE LIGHTS LOCATED PER SHOP ORDER
5. CONCEPTUAL DRAWING STAGE

REV	DATE	BY	CH
7	24JAN17	RWI	CAG
6	01NOV16	RWI	JAF

CHASSIS DATA
MAKE: FL
MODEL: 114-SD

Pierce MANUFACTURING INC.
BRADENTON, FLORIDA

TITLE: 1000-D-3000 GALLON POLY WETSIDE TANKER,HIGH SIDE HALE MBP-100,1000 GPM SINGLE STAGE PTO PUMP

FOR: PIERCE MANUFACTURING INC. BRADENTON, FLORIDA

DWG NO.: SF-4208AD

JOB NO.	SF-4208
SCALE	1:24
DATE	
DRAWN BY	JAF 030CT16
CHECKED BY	RWI 040CT16
SHEET SIZE	D
SHEET NO.	1 OF 1

View File Created 26-JAN-2017 08:19:31