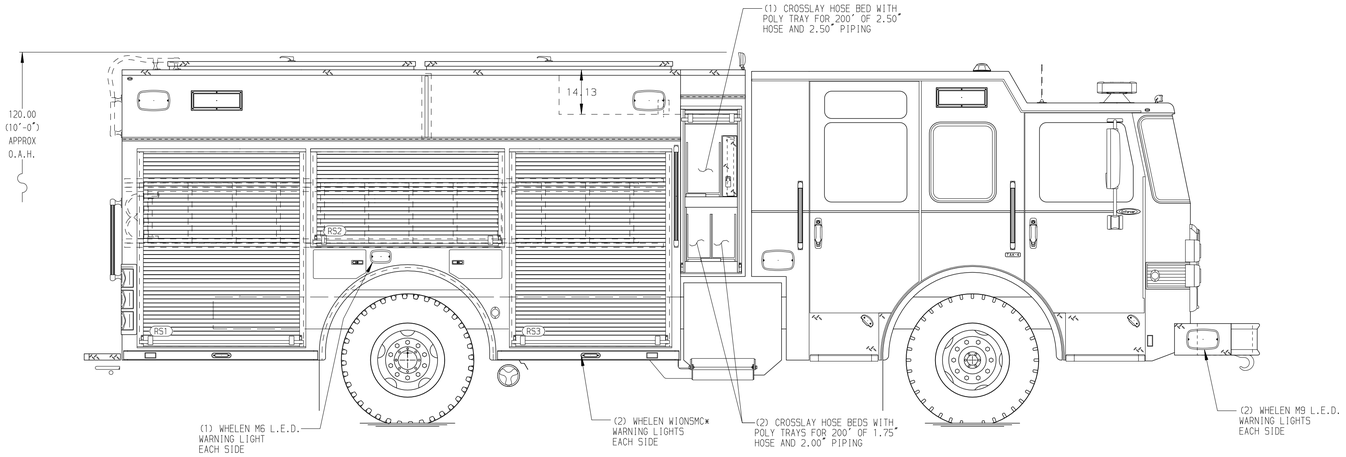

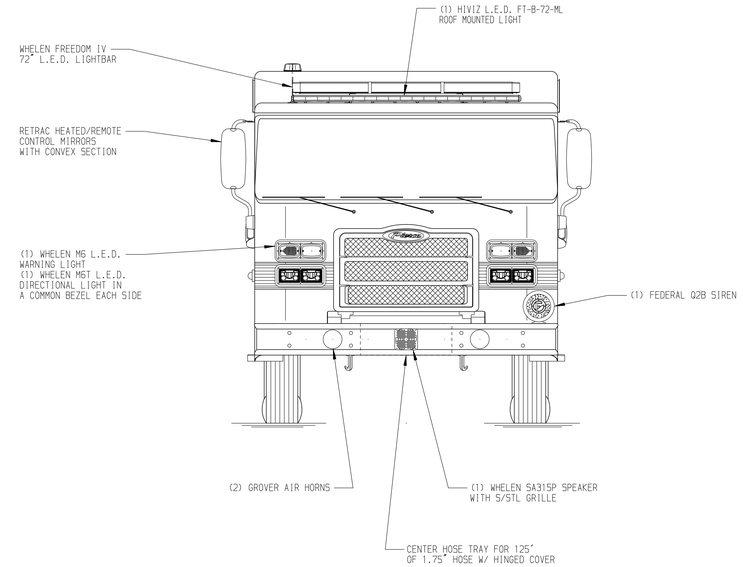

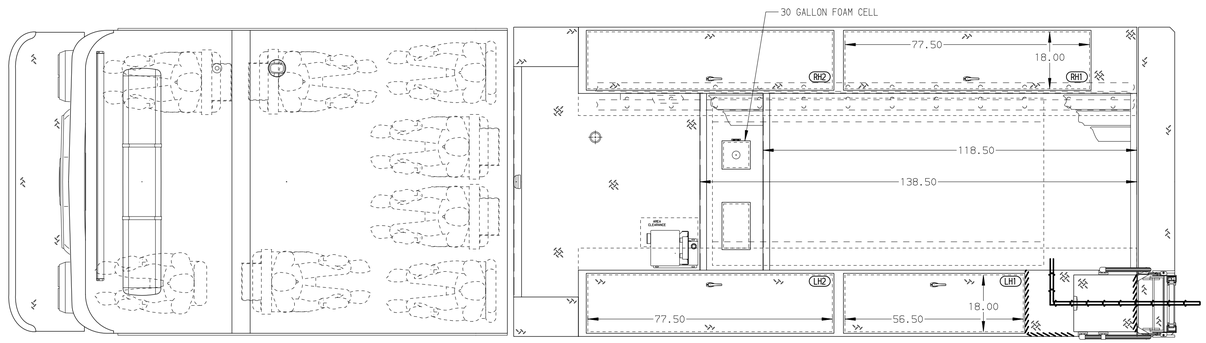

HOSEBED CAPACITIES

1. 1000' OF 5.00" D.J. HOSE
2. 600' OF 2.50" D.J. HOSE

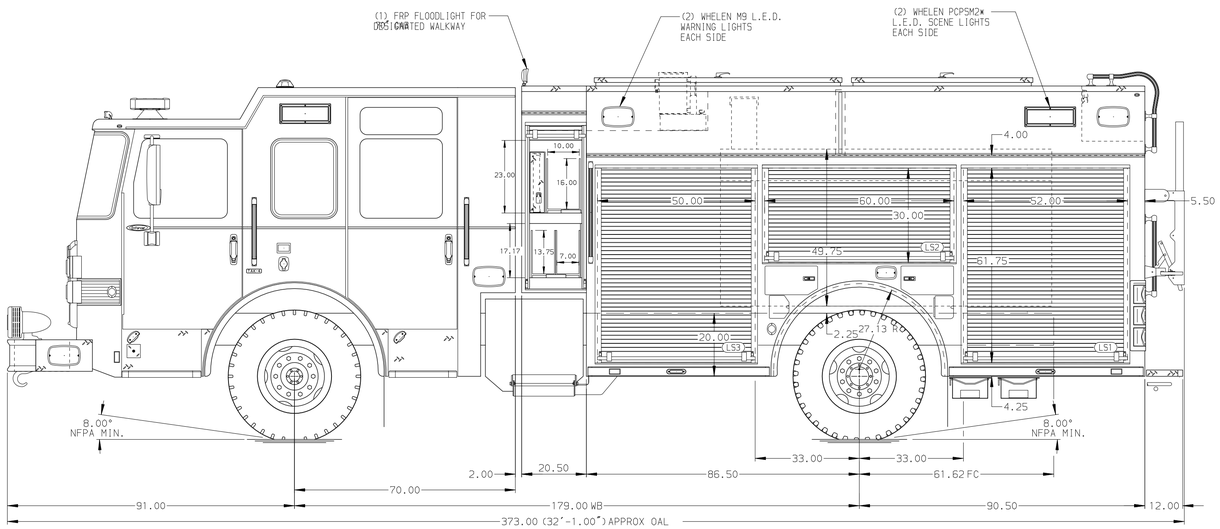

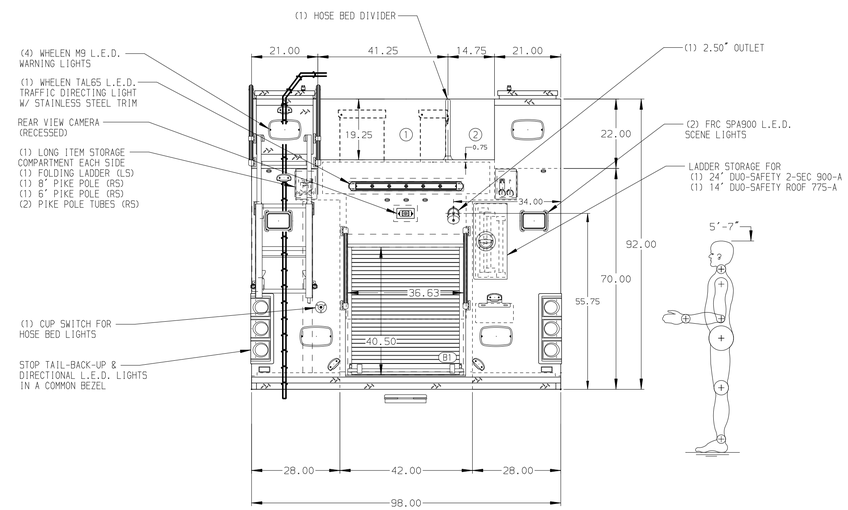

ALUMINUM BODY

NOTE

DIMENSIONS SHOWN ARE APPROXIMATE AND ARE SUBJECT TO MINOR DEVIATIONS AS MAY OCCUR OR BE NECESSARY IN CONSTRUCTION.
MINOR DETAILS NOT SHOWN.

1. ONE 1.50 OUTLET WITH 2.00 PIPING AND SWIVEL LOCATED IN CENTER BUMPER TRAY
2. SHORELINE RECEPTACLE WITH KUSSMAUL SUPER AUTO-EJECT LOCATED ON DRIVER SIDE OF THE CAB
3. AIR INLET WITH DISCONNECT COUPLING RECESSED IN DRIVER'S CAB STEP WELL
4. BATTERY CHARGER LOCATED BEHIND DRIVER'S SEAT
5. BATTERY CHARGE INDICATOR LOCATED ON DRIVER SIDE OF CAB
6. FIVE FULL WIDTH/DEPTH SHELVES LOCATED PER SHOP ORDER
7. FOUR FLOOR MOUNTED SLIDE-OUT TRAYS LOCATED PER SHOP ORDER
8. TWO ADJUSTABLE SWING-OUT TOOLBOARDS LOCATED PER SHOP ORDER
9. PLUMBING FOR FUTURE FOAM SYSTEM

REV	DATE	BY	CH
▽	-	-	-

CUSTOMER APPROVAL

APPROVED BY: _____

DATE: _____

Pierce MANUFACTURING INC.

CHASSIS DATA	TITLE	1500-D-780P, 750G WATER, 30G FOAM, 177" PUC RESCUE (3) CROSSLAYS, DELUGE OUTLET, LADDERS THRU RS BODY	
MAKE PIERCE	FOR	PIERCE STOCK FIELD PIERCE MANUFACURING INC.	
MODEL ENFORCER	DWG NO.	36719AD	

JOB NO.	36719
SCALE 1:24	DATE
DRAWN BY COL	12MAY21
CHECKED BY THS	12MAY21
SHEET SIZE D	SHEET NO. 1 OF 1

View File Created 12-MAY-2021 14:22:27