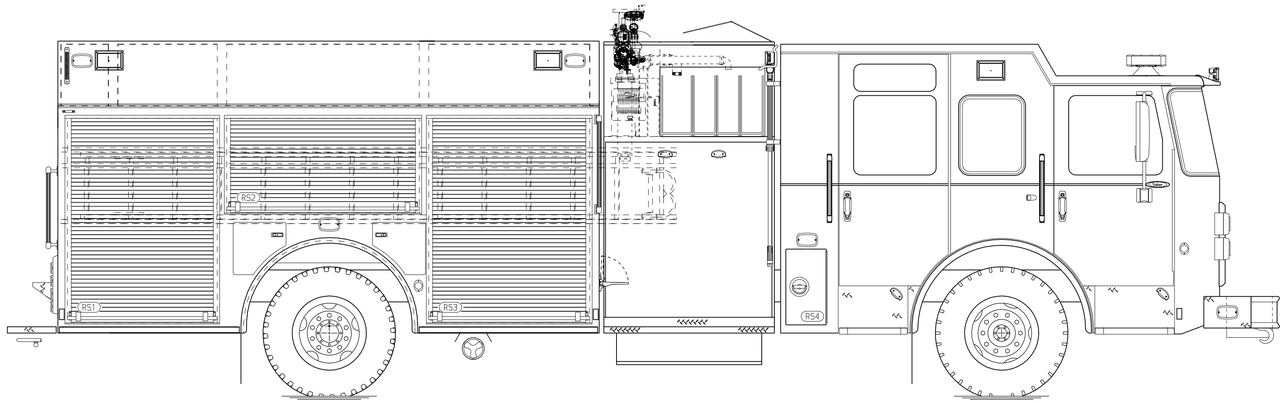

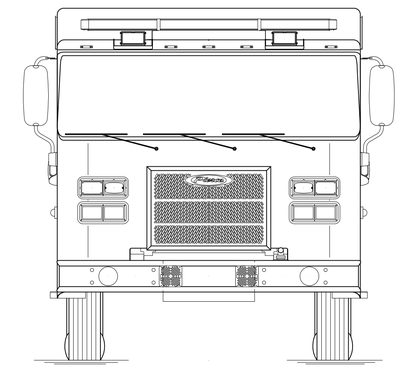

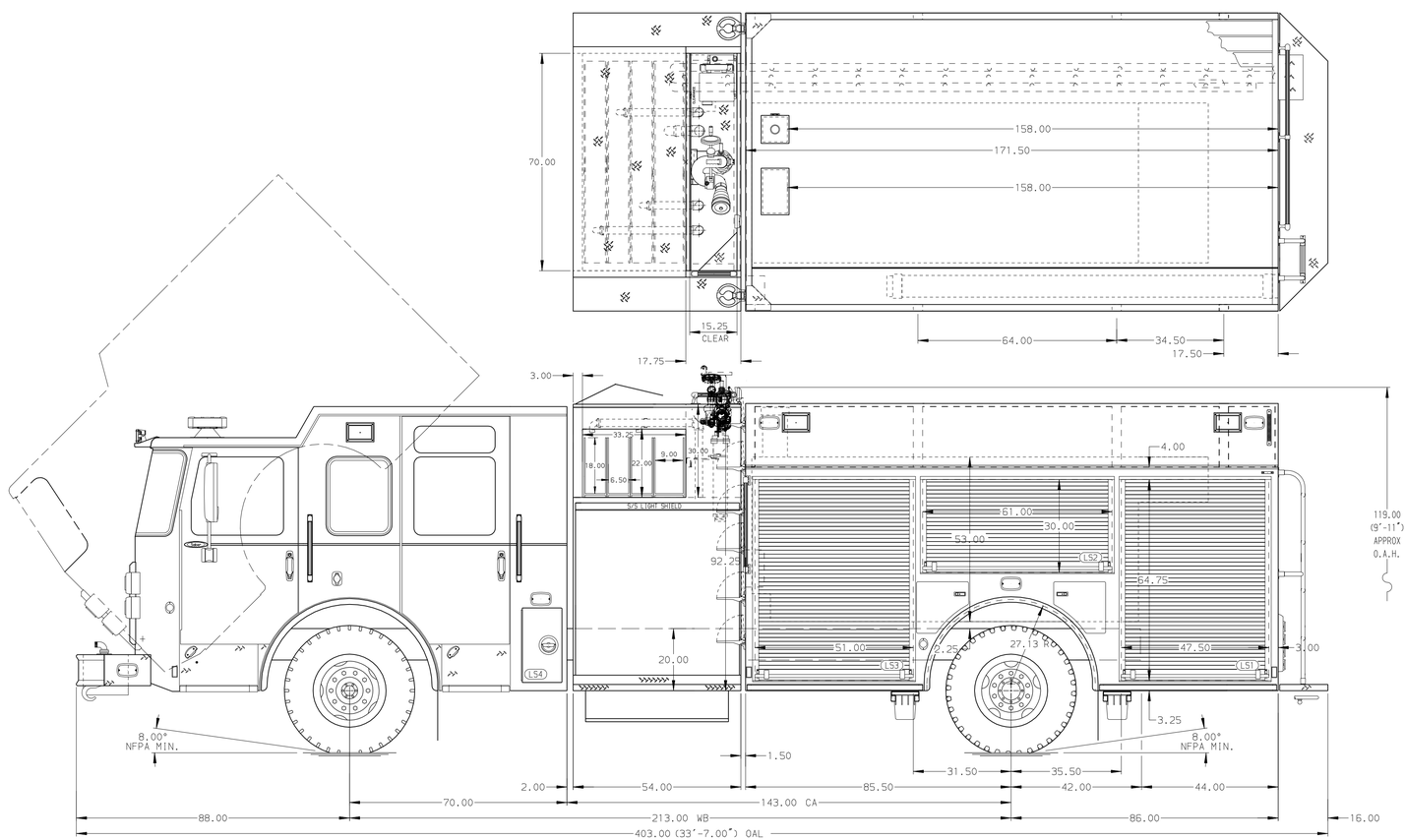

HOSEBED CAPACITIES

1. 300' OF 3.00" HOSE
2. 1200' OF 5.00" HOSE
3. 800' OF 3.00" HOSE

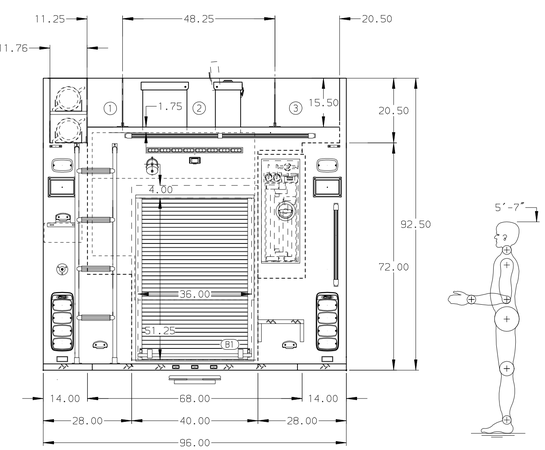

ALUMINUM BODY

SIDE ROLL AND FRONTAL IMPACT PROTECTION

NOTE

DIMENSIONS SHOWN ARE APPROXIMATE AND ARE SUBJECT TO MINOR DEVIATIONS AS MAY OCCUR OR BE NECESSARY IN CONSTRUCTION.
MINOR DETAILS NOT SHOWN.

REV	DATE	BY	CH
▽	-	-	-

CUSTOMER APPROVAL

APPROVED BY: _____

DATE: _____

CHASSIS DATA

MAKE: PIERCE

MODEL: SABER FR

Pierce MANUFACTURING INC.

TITLE: 1500-D-1250P, 1220 GAL OF WATER W/ 30 GAL FOAM CELL 171" FH FDLER,LDRS. BTWN TANK & S. SHEET,(4) X-LAYS

FOR: COEYMANS HOLLOW FIRE COMPANY BID# 736
FIREMATIC SUPPLY CO, INC. WILLIAM KRUG

DWG NO.: 04-5746

JOB NO.	PRELIM
SCALE	1:24
DATE	
DRAWN BY	LST
DATE	13FEB19
CHECKED BY	-
	-
SHEET SIZE	D
SHEET NO.	1 OF 1