PUMPER

BODY
Long Aluminum 2nd Gen Pumper

CHASSIS
Saber FR Chassis

CHASSIS

AXLE,FRONT,CUSTOM
19,500lb TAK-4

AXLE,REAR
27,000 lb Meritor Axle

ENGINE
450 HP Cummins L9 Engine

TRANSMISSION
Allison 5th Gen, 3000 EVS P

BUMPER
19" Extended Stainless Steel

CAB
7010 Saber FR Cab

BODY

WATER TANK
750 Gallon New York Style Water Tank

COMPT,PUMPER,REAR
30.75" FF Rollup Rear Compt

COMPT,PUMPER,LEFT SIDE
161" Rollup Full Height Front & Rear FDLER

COMPT,PUMPER,RIGHT SIDE
161" Rollup Full Height Front & Rear FDLER

FIRE SUPPRESSION

PUMPHOUSE
48" Control Zone Side Mount

PUMP
1500 GPM Waterous CSU

CROSSLAYS,1.50"
(2) 1.50" Standard Capacity

CROSSLAYS,2.50"
(1) 2.50" Standard Capacity

SPEEDLAYS
Speedlays Not Required

GENERATOR
Generator Not Required

Foam System
Husky 3 Foam System

Foam Cell
30 Gallon Foam Cell

Side Roll and Frontal Impact Protection

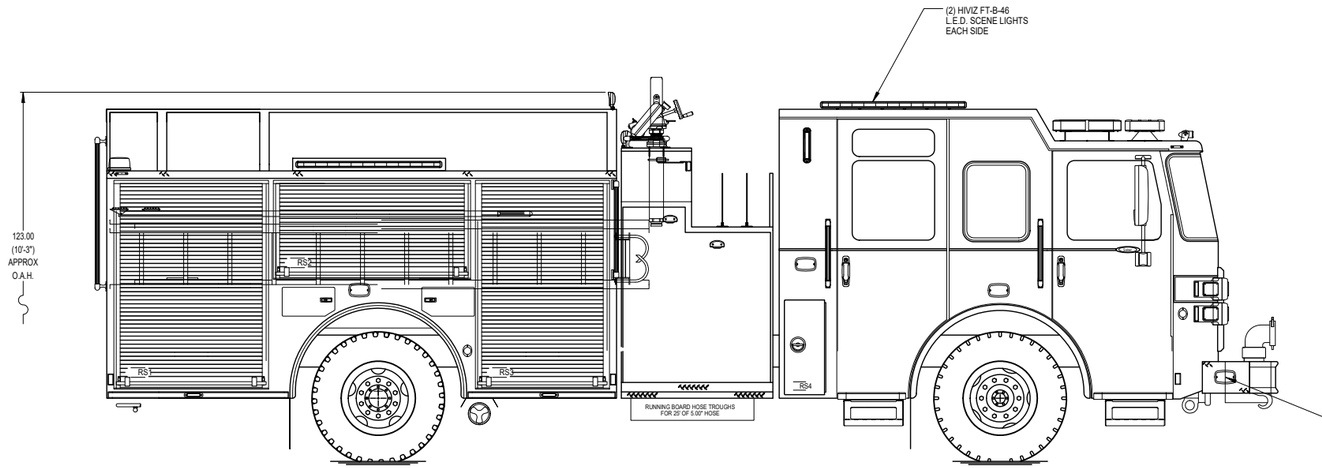

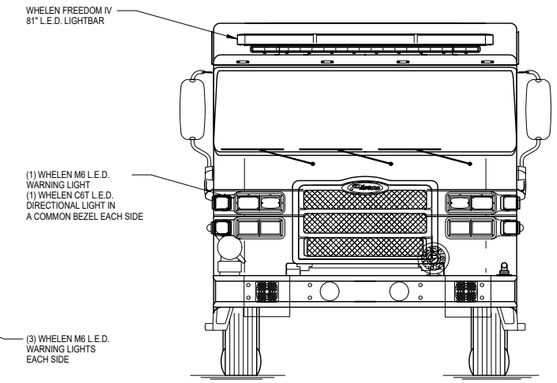

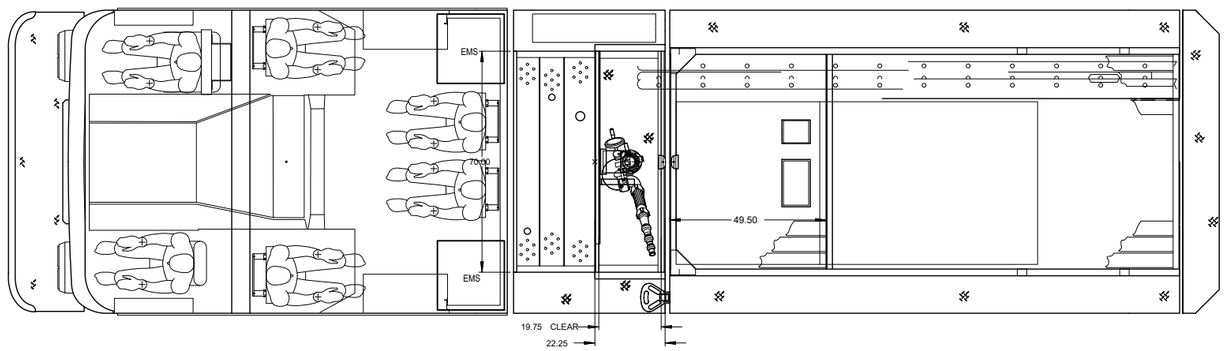

HOSEBED CAPACITY

BED 1
300' OF 1.75" WITH 400' OF 2.50" D.J. POLY HOSE

BED 2
1100' OF 5.00" D.J. POLY HOSE

BED 3
500' OF 3.00" D.J. POLY HOSE

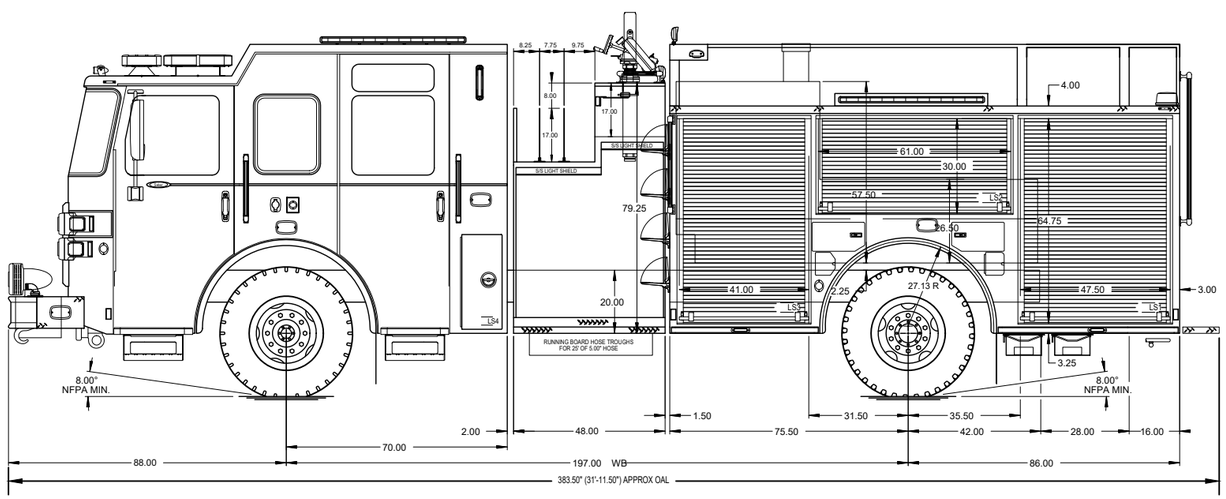

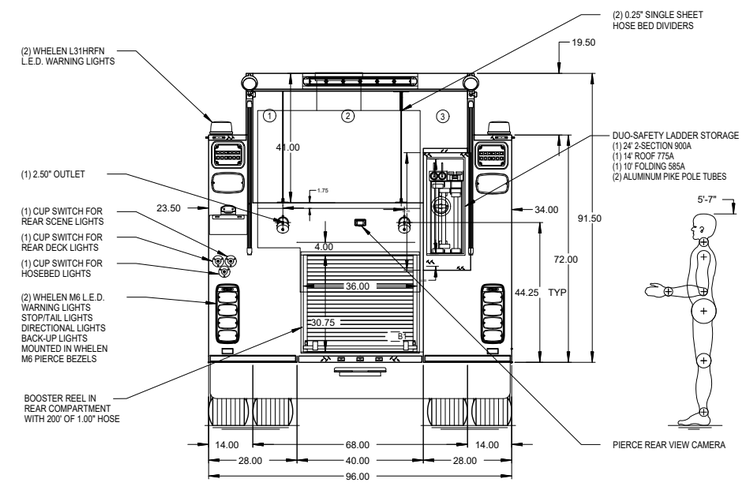

NOTE

DIMENSIONS SHOWN ARE APPROXIMATE AND ARE SUBJECT TO MINOR DEVIATIONS AS MAY OCCUR OR BE NECESSARY IN CONSTRUCTION.
MINOR DETAILS NOT SHOWN.

REV	DATE	BY	CH
	-	-	-

CUSTOMER APPROVAL
APPROVED BY: _____
DATE: _____

Pierce MANUFACTURING INC.

CHASSIS DATA	TITLE	1500-D-750 NY 161", Ladders Between Tank & Side Sheet	JOB NO. -
MAKE PIERCE	FOR	Brookhaven Fire Department Brookhaven, New York	SCALE 1:24 / DATE
MODEL SABER FR	DWG NO.	Rev 1	DRAWN BY MZI / 24MAR2023
			CHECKED BY - / -
			SHEET SIZE D / SHEET NO. 1 OF 1