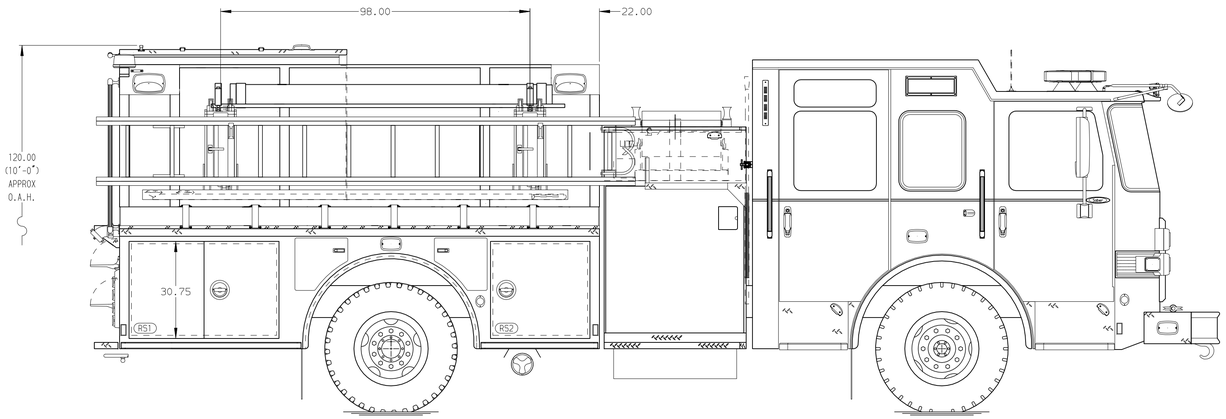

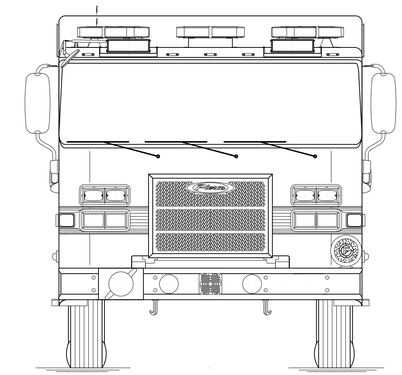

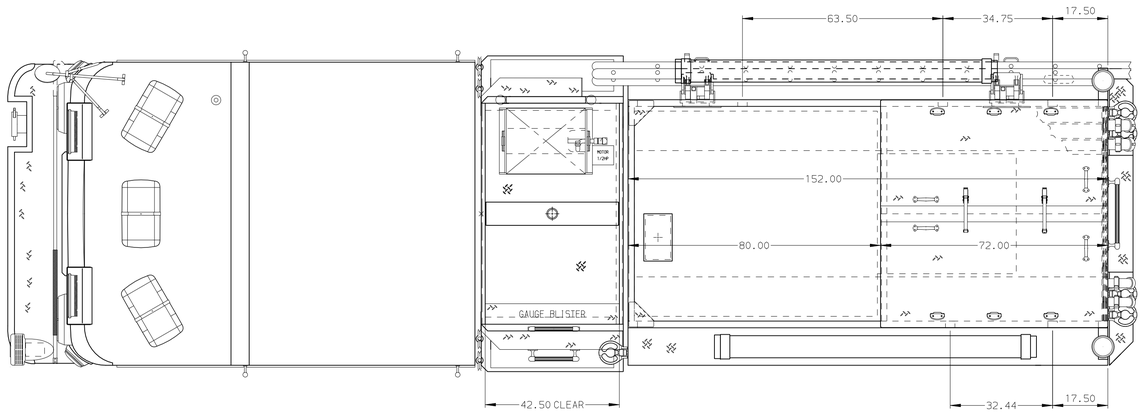

HOSEBED CAPACITIES

1. 200' OF 2.50" D.J. POLY HOSE
2. 500' OF 3.00" D.J. POLY HOSE
3. 1000' OF 5.00" D.J. POLY HOSE
4. 200' OF 1.75" D.J. POLY HOSE
5. 400' OF 1.75" D.J. POLY HOSE
6. 300' OF 3.00" D.J. POLY HOSE

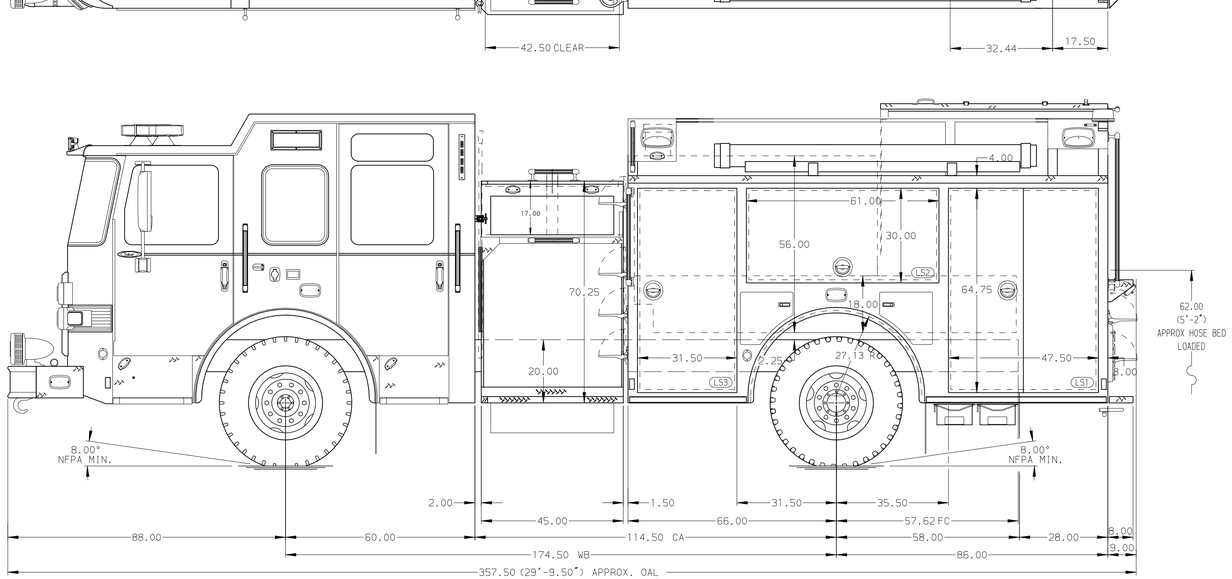

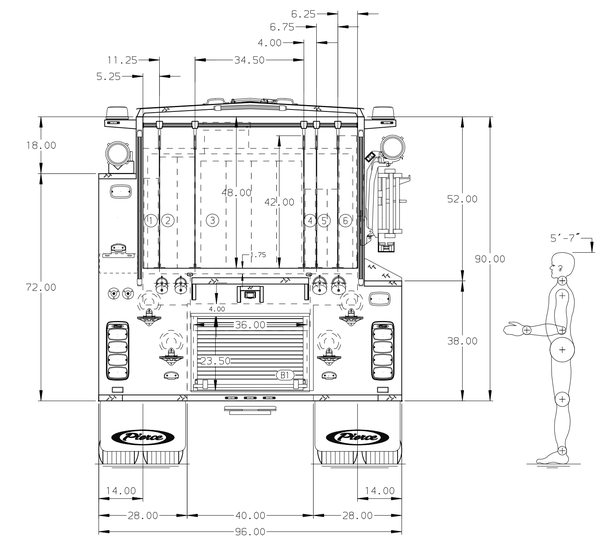

(ALUMINUM BODY) (MAXIMUM O.A.H. 130.00") (TARGET O.A.L. 360.00") (SIDE ROLL AND FRONTAL IMPACT PROTECTION)

NOTE

DIMENSIONS SHOWN ARE APPROXIMATE AND ARE SUBJECT TO MINOR DEVIATIONS AS MAY OCCUR OR BE NECESSARY IN CONSTRUCTION.
MINOR DETAILS NOT SHOWN.

CUSTOMER APPROVAL

APPROVED BY: _____

DATE: _____

REV	DATE	BY	CH
V	12JAN22	LST	NPA

CHASSIS DATA	
MAKE	PIERCE
MODEL	SABER FR

Pierce MANUFACTURING INC.

TITLE: 1500-D-1000P, 152 PUMPER BODY, LS FH FDLR, RS LOW RS ZICO LADDER RACK, 48" SIDE CONTROL, DELUGE

FOR: BEACON HOSE COMPANY #1 — BID #780
FIREMATIC SUPPLY CO, INC — JEFF HORN

DWG NO. 04-9657

JOB NO.	PRELIM
SCALE	1:24
DATE	
DRAWN BY	BST
	260CT21
CHECKED BY	NPA
	270CT21
SHEET SIZE	D
SHEET NO.	1 OF 1