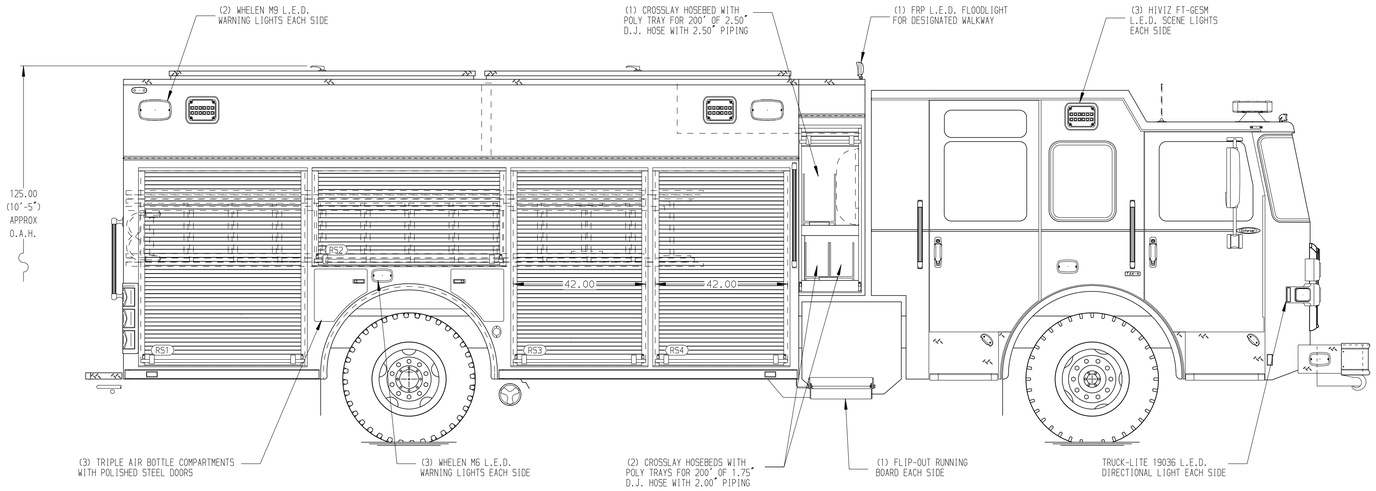

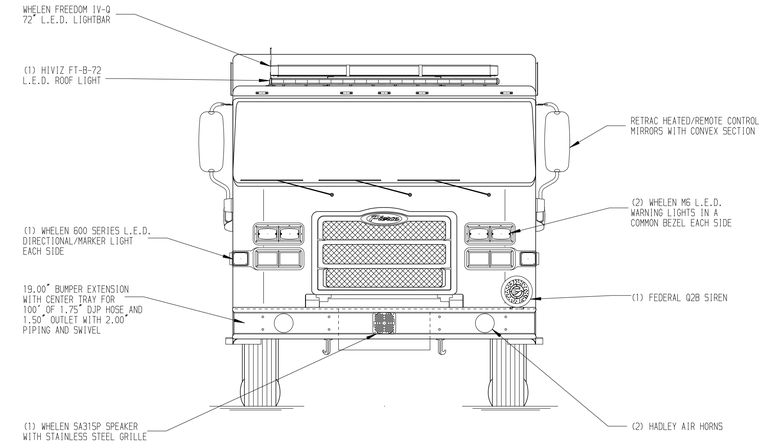

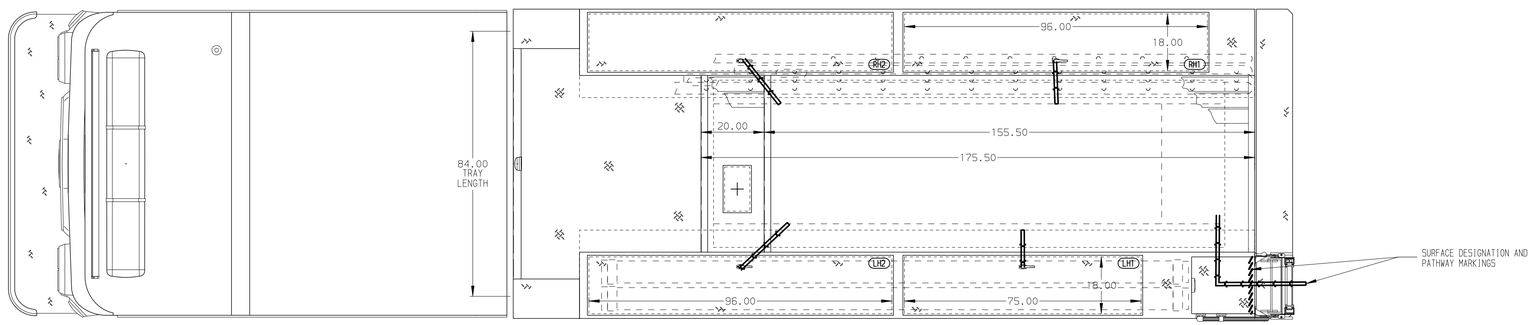

HOSEBED CAPACITIES

1 - 1500' OF 4.00" D.J. POLY HOSE
2 - 600' OF 2.50" D.J. POLY HOSE
3 - 300' OF 1.75" D.J. POLY HOSE

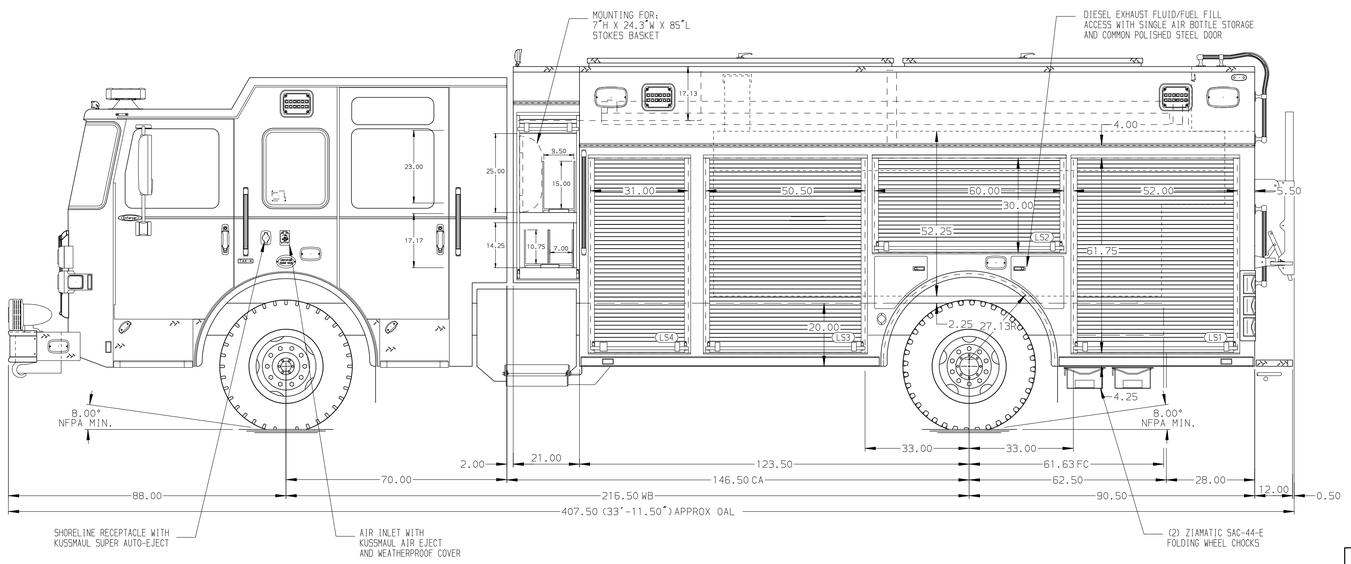

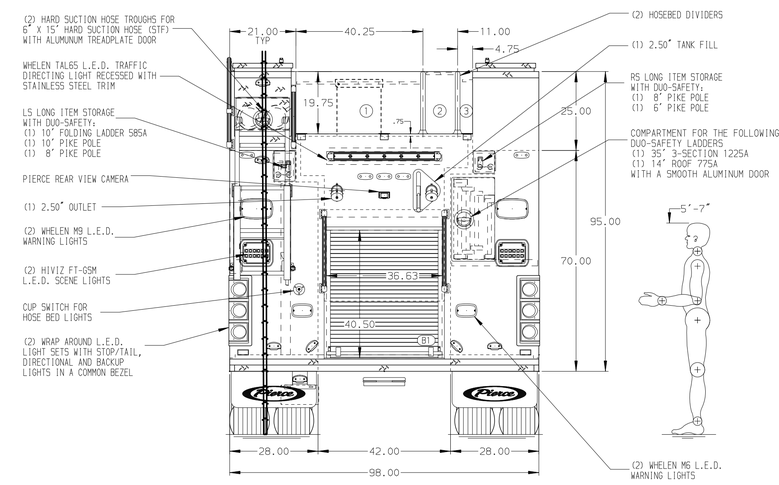

ALUMINUM BODY

NOTE

DIMENSIONS SHOWN ARE APPROXIMATE AND ARE SUBJECT TO MINOR DEVIATIONS AS MAY OCCUR OR BE NECESSARY IN CONSTRUCTION.
MINOR DETAILS NOT SHOWN.

1. BATTERY CHARGER LOCATED BEHIND DRIVER SEAT
2. BATTERY CHARGER INDICATOR BEHIND DRIVER'S SEAT DISPLAYED THROUGH WINDOW
3. DUAL L.E.D. LIGHT STRIPS LOCATED IN HOSE BED
4. PULL STRAP ON DOOR LOCATED PER ORDER
5. MIC AND SPEAKER COMPARTMENT LOCATED PER ORDER
6. AIR BOTTLE HOLDER LOCATED PER ORDER

REV	DATE	BY	CH
▽	-	-	-

CUSTOMER APPROVAL
APPROVED BY:
DATE:

Pierce MANUFACTURING INC.

CHASSIS DATA	TITLE	1500 GPM, 1250G WATER TANK 214" PUC PUMPER, HARD WIRED	
MAKE: PIERCE	FOR	VILLAGE OF ARCADE FIRE DEPARTMENT ARCADE, NEW YORK	
MODEL: ENFORCER	DWG NO.	39508AD	

JOB NO.	38508
SCALE	1:24
DATE	
DRAWN BY	JJB 29AUG24
CHECKED BY	SJS 29AUG24
SHEET SIZE	D
SHEET NO.	1 OF 1