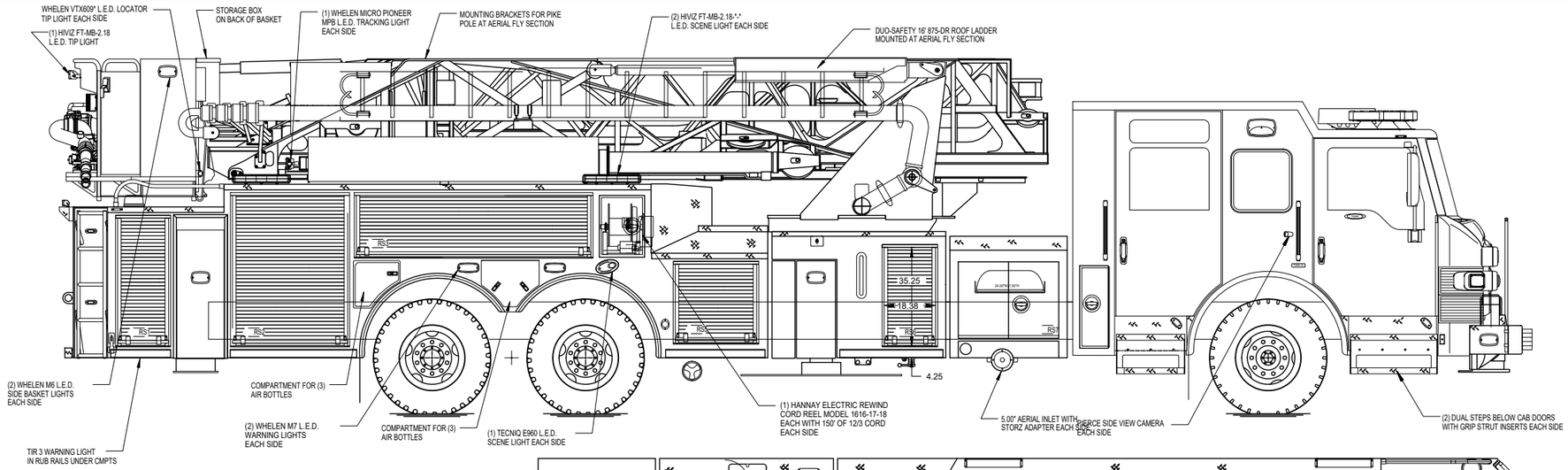

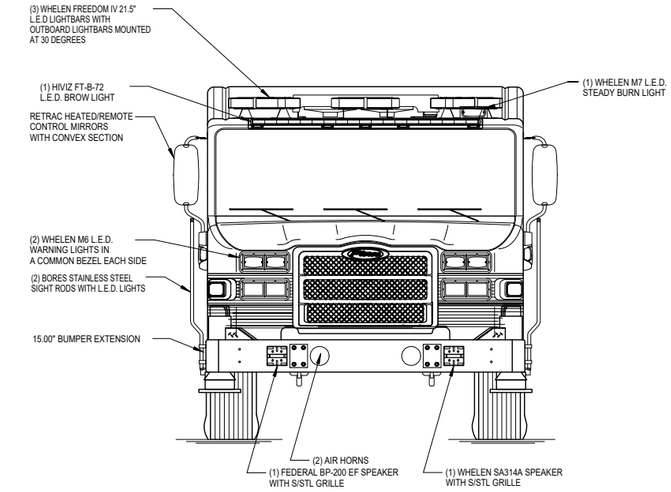

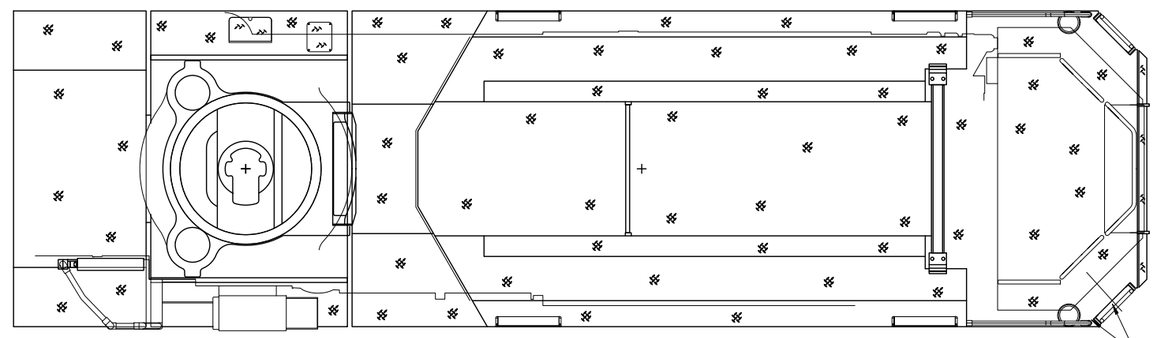

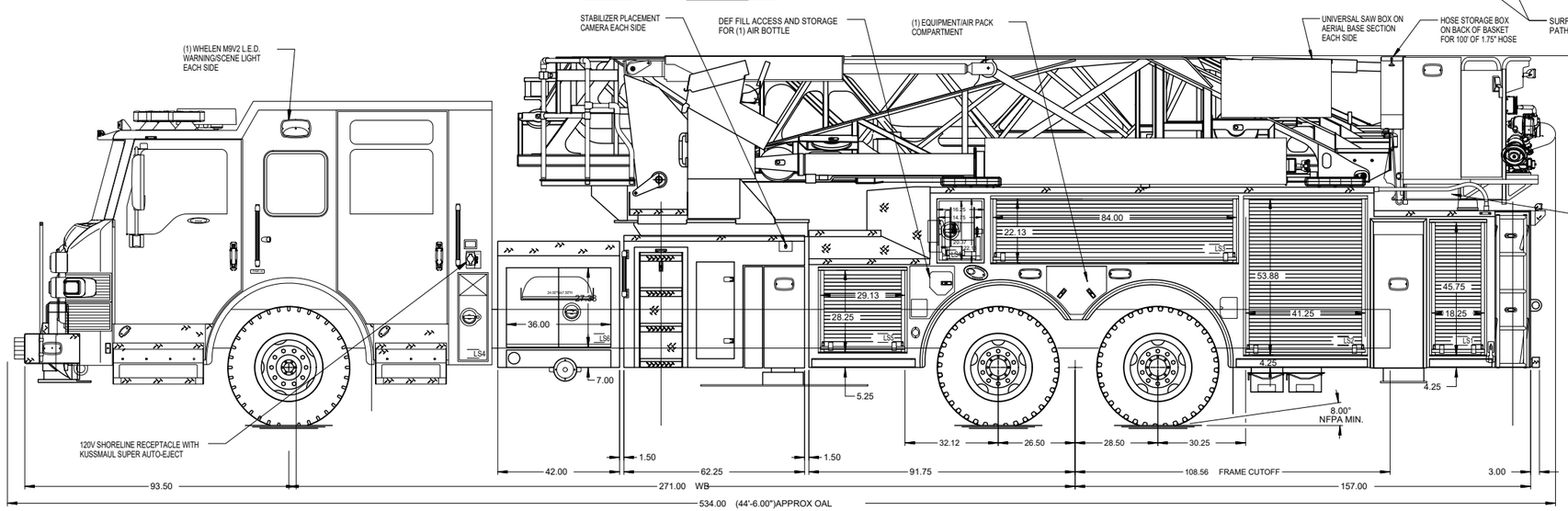

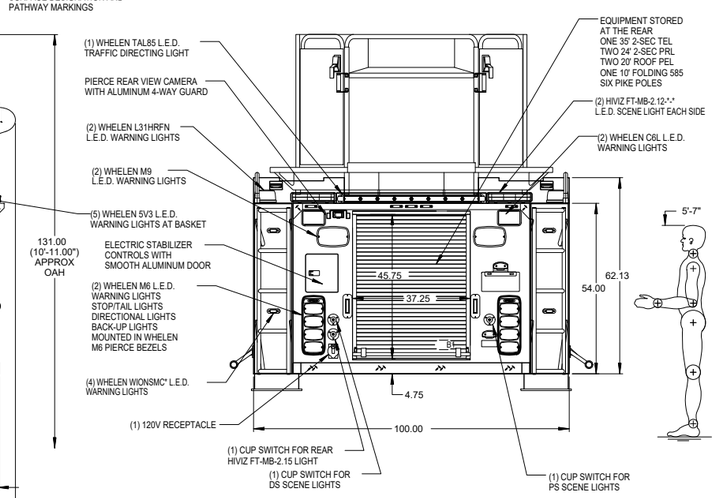

ALUMINUM BODY

NOTE

DIMENSIONS SHOWN ARE APPROXIMATE AND ARE SUBJECT TO MINOR DEVIATIONS AS MAY OCCUR OR BE NECESSARY IN CONSTRUCTION.
MINOR DETAILS NOT SHOWN.

CUSTOMER APPROVAL

APPROVED BY: _____

DATE: _____

REV	DATE	BY	CH
7	-	-	-

CHASSIS DATA — MAKE: PIERCE — MODEL: VELOCITY

Pierce MANUFACTURING INC.

TITLE: 100' ASCENDANT AERIAL TOWER AND BODY ASSEMBLY NO PUMP, NO TANK

FOR: BRENTWOOD FIRE DISTRICT WEST SAYVILLE, NY

DWG NO.: –

JOB NO.	-
SCALE 1:24	DATE
DRAWN BY MZI	16MAY2022
CHECKED BY -	-
SHEET SIZE D	SHEET NO. 1 OF 1