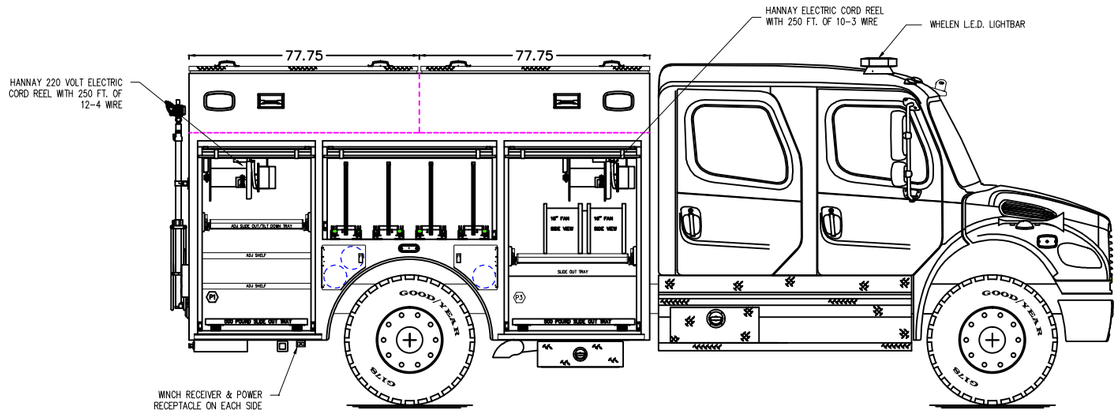

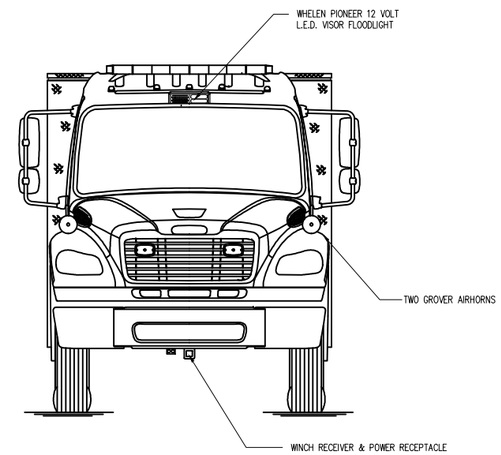

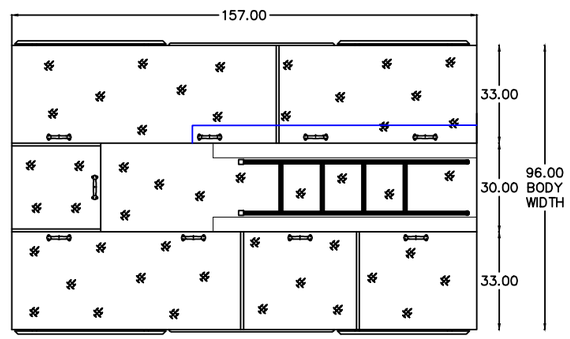

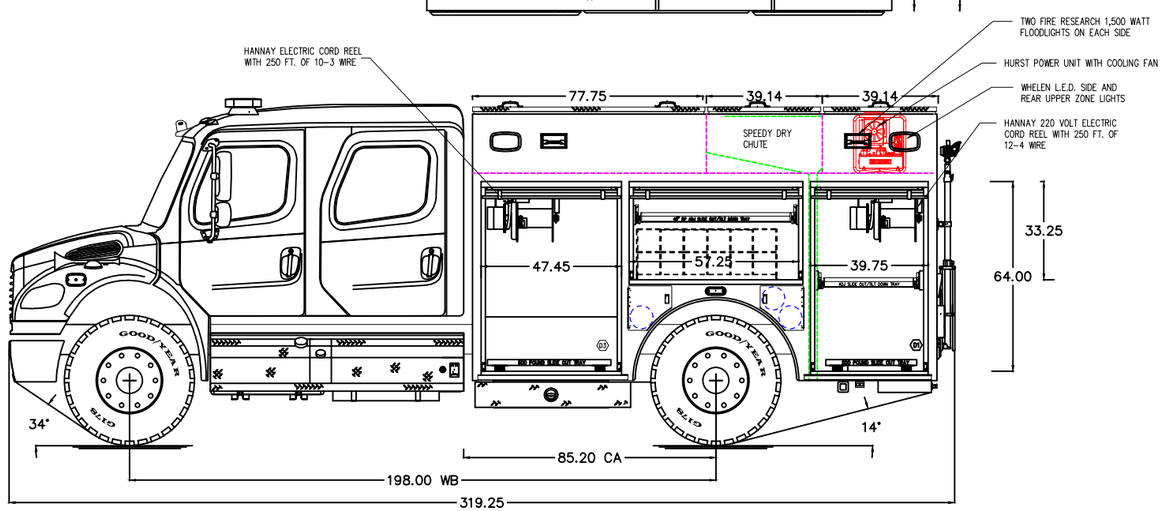

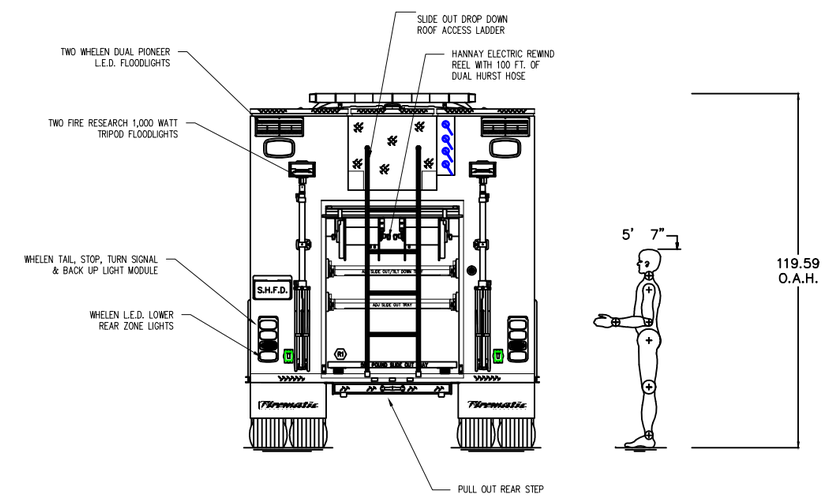

Firematic MANUFACTURING

JOB NO.	B11131
DATE	MAR 06, 2017
CHASSIS DATA	FREGHTLINER CREW CAB
DRAWN BY	K.ZIMMERLY
APPROVED BY	D. HORTON
SHEET NO.	1 / 1

NOTE
THIS DRAWING IS CONCEPTUAL AND IS NOT AN EXACT REPRESENTATION OF THE TRUCK DRAWN. DIMENSIONS SHOWN ARE APPROXIMATE AND ARE SUBJECT TO DEVIATION AS MAY OCCUR OR BE NECESSARY DURING CONSTRUCTION.

SOME DETAILS NOT SHOWN. DIMENSIONS ARE IN INCHES.

RESCUE BODY
ROM ROLL UP DOORS, CUSTOM SHELVING
ONAN 40KW PTO GENERATOR

REVISION NOTES	
A	ORIGINAL

TITLE: **COMMERCIAL RESCUE**

FOR: **SAG HARBOR FD.**
SAG HARBOR NY