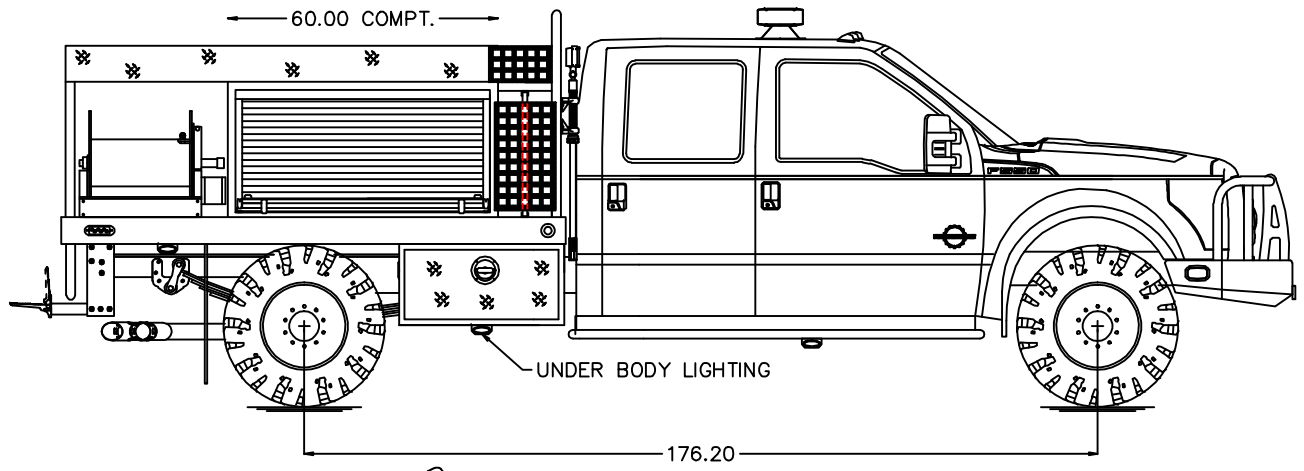

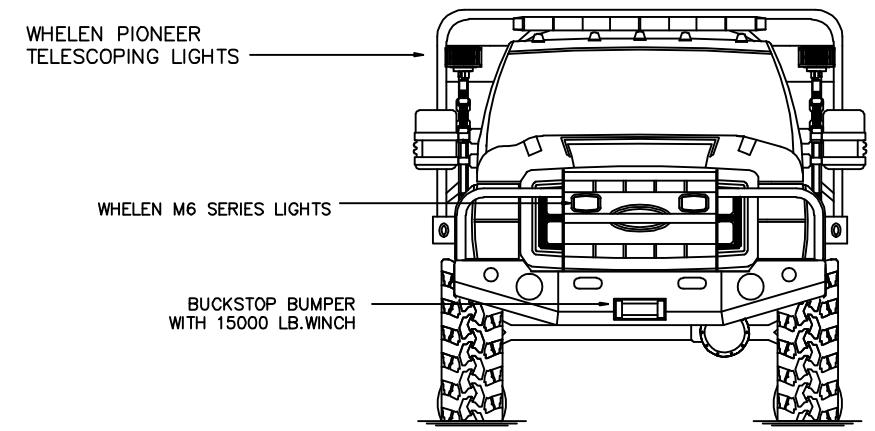

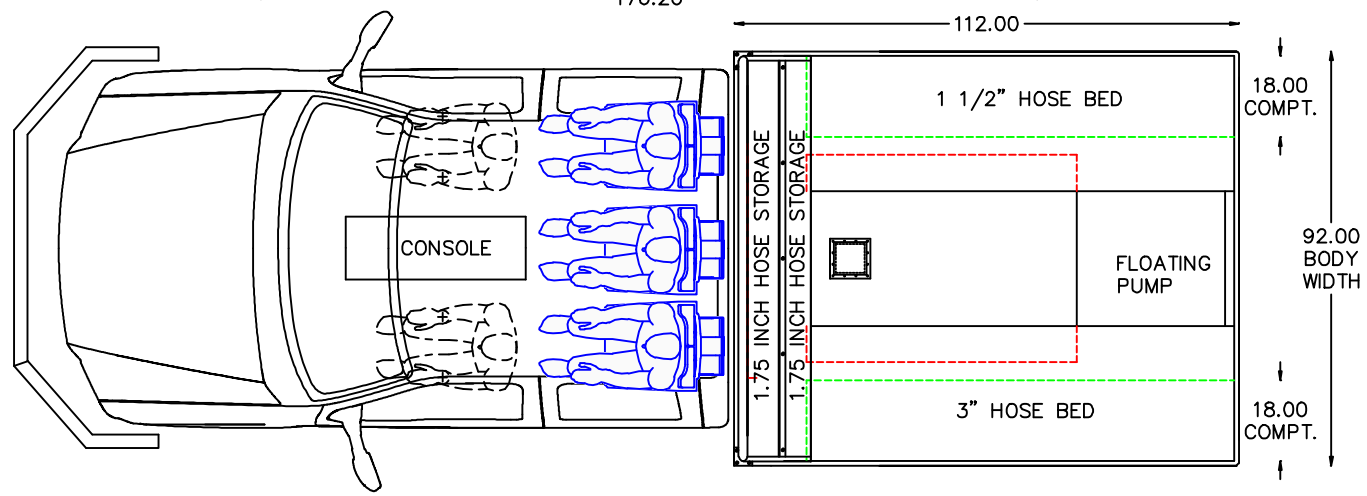

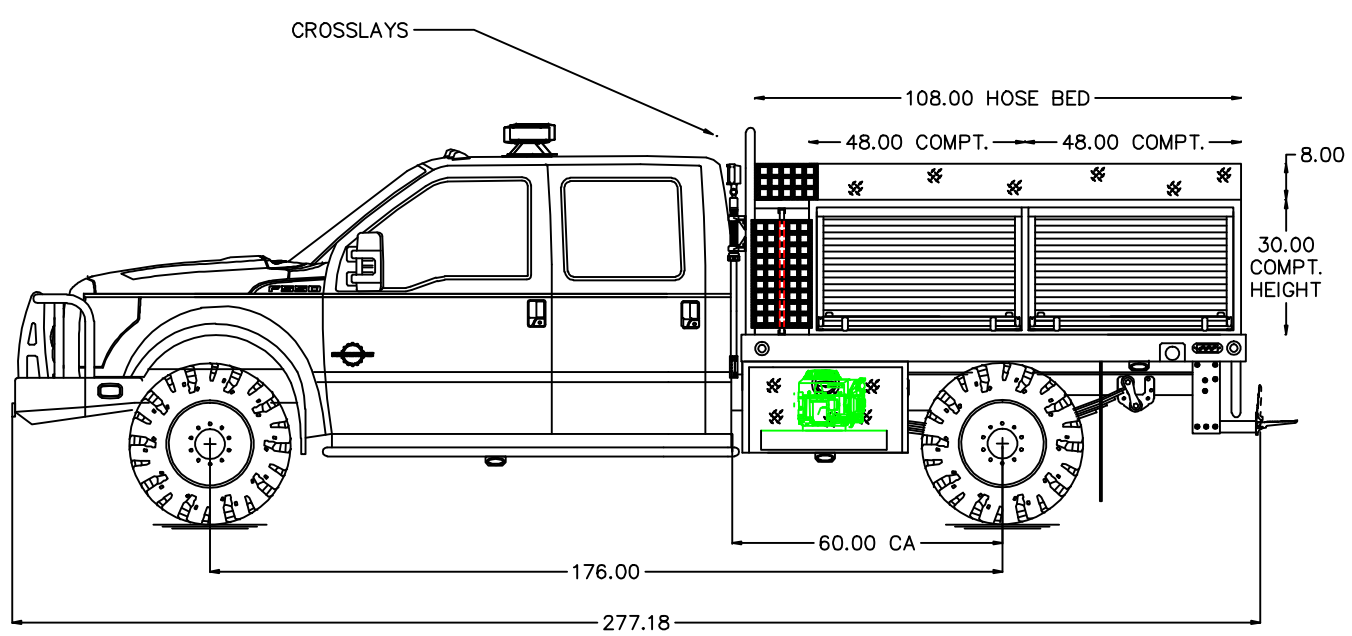

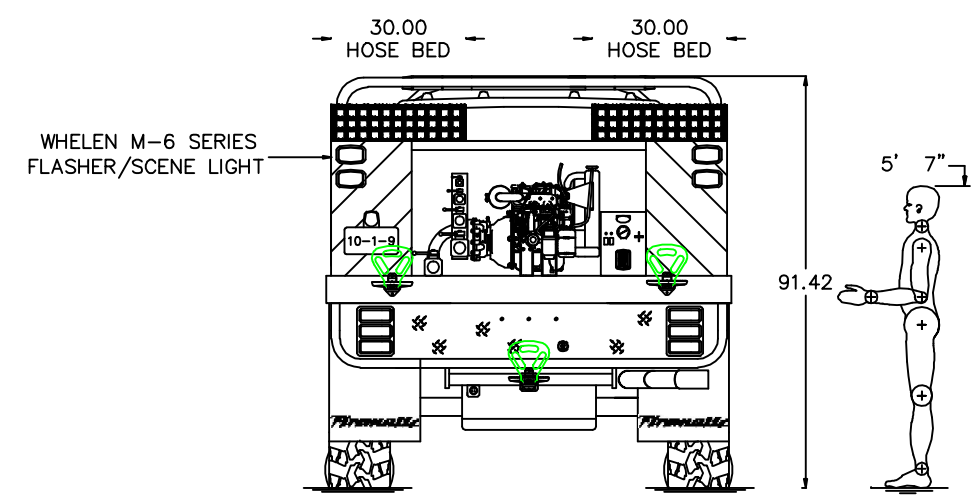

NOTE
THIS DRAWING IS CONCEPTUAL AND IS NOT AN EXACT REPRESENTATION OF THE TRUCK DRAWN. DIMENSIONS SHOWN ARE APPROXIMATE AND ARE SUBJECT TO DEVIATION AS MAY OCCUR OR BE NECESSARY DURING CONSTRUCTION.

SOME DETAILS NOT SHOWN. DIMENSIONS ARE IN INCHES.

400 GALLON POLY-TANK
HALE HPX300 – B26 PUMP
SUPER SINGLE IROK TIRE PACKAGE

Firematic MANUFACTURING		JOB NO.	2232
		DATE	APR,18 2013
TITLE	RALLY 550 WILDLAND PUMPER	CHASSIS DATA	FORD F-550 SUPER CAB
FOR	BURLINGTON FD BURLINGTON, MA.	DRAWN BY	K. ZIMMERLY
		APPROVED BY	D. HORTON
		SHEET NO.	1 / 1