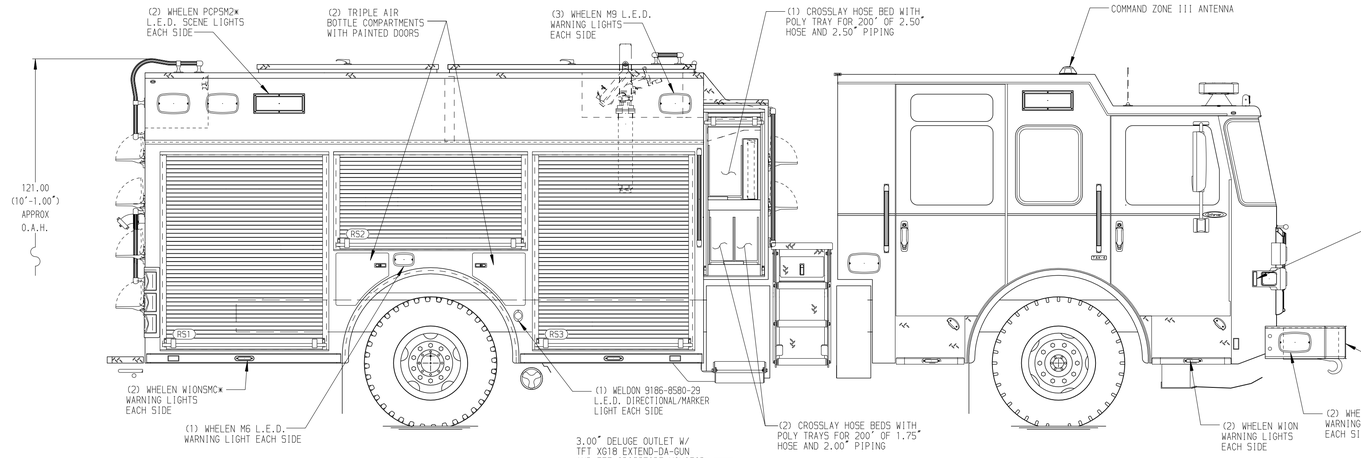

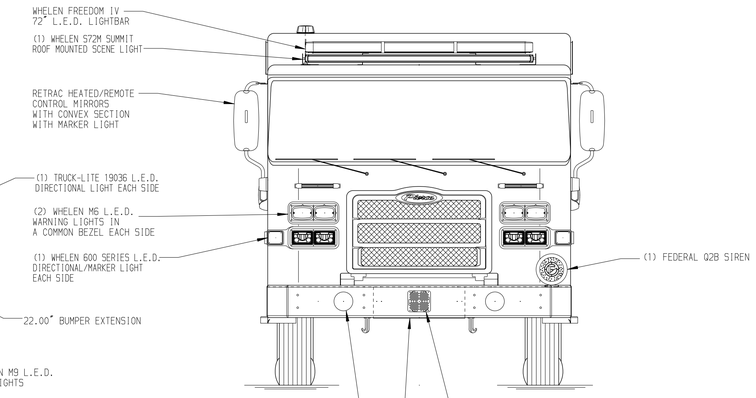

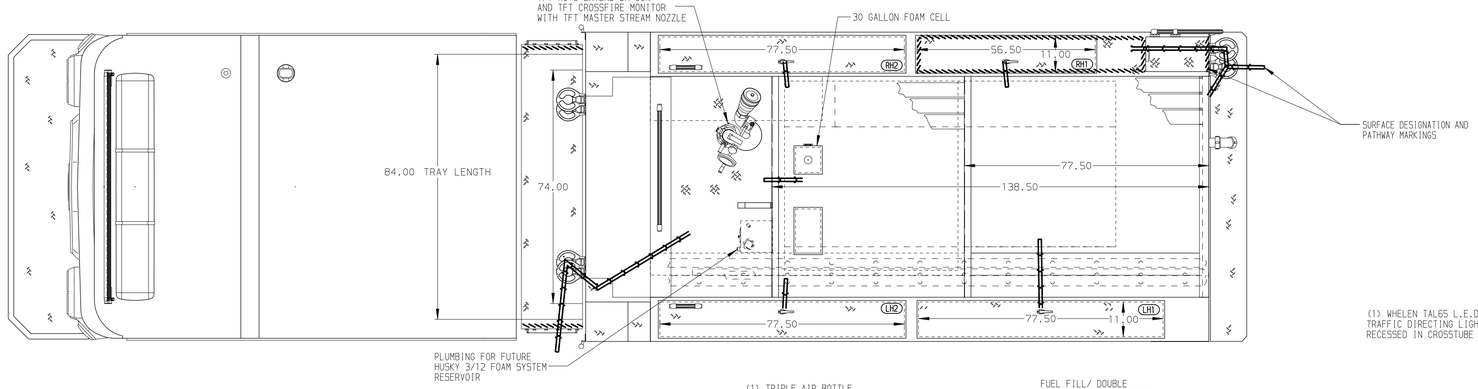

HOSEBED CAPACITIES

1. 1000' OF 5.00" D.J. HOSE
2. 600' OF 2.50" D.J. HOSE

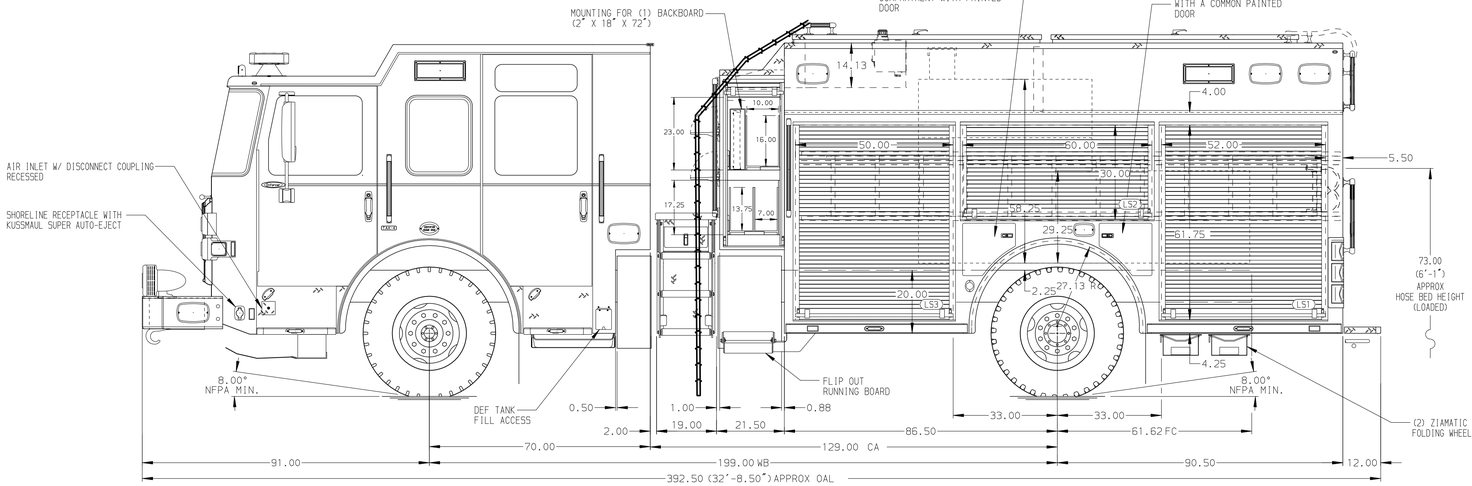

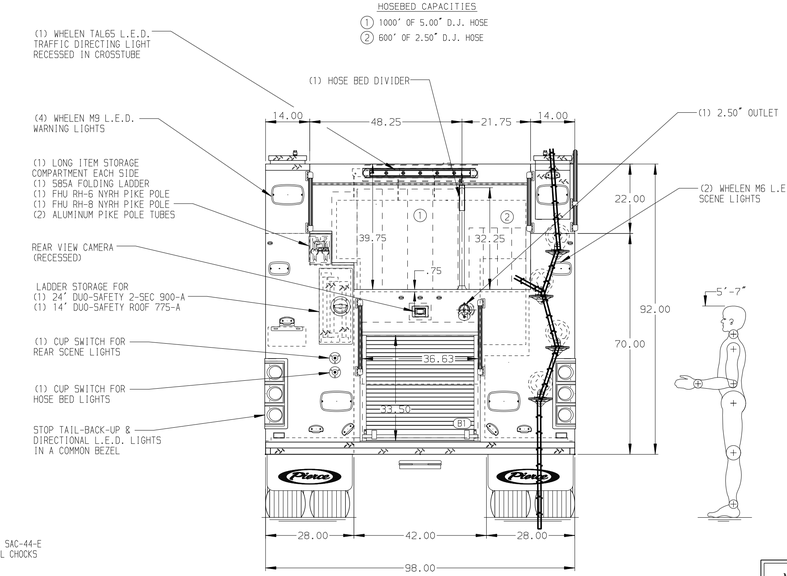

NFPA 1900 (2024) COMPLIANT

ALUMINUM BODY

CUSTOMER APPROVAL

APPROVED BY: _____

DATE: _____

Pierce MANUFACTURING INC.

				CHASSIS DATA	TITLE	2000 GPM, 830 GAL TANK, 800 GAL WATER, 30 GAL FOAM 177" PUC TM BODY, MUX	JOB NO. 45217
				MAKE PIERCE	FOR	PIERCE STOCK FIELD APPLETON, WISCONSIN	SCALE 1:24 / DATE
							DRAWN BY BTH / 06OCT25
							CHECKED BY SZE / 6OCT25
V	10OCT25	BTH	SIZE	MODEL ENFORCER	DWG NO.	45217AD	SHEET SIZE D / SHEET NO. 1 OF 1
REV	DATE	BY	CH				

NOTE

DIMENSIONS SHOWN ARE APPROXIMATE AND ARE SUBJECT TO MINOR DEVIATIONS AS MAY OCCUR OR BE NECESSARY IN CONSTRUCTION.
MINOR DETAILS NOT SHOWN.

1. BATTERY CHARGER LOCATED BEHIND DRIVER'S SEAT
2. BATTERY CHARGE INDICATOR LOCATED ON DRIVERS SEAT RISER

View File Created 10-OCT-2025 11:17:40