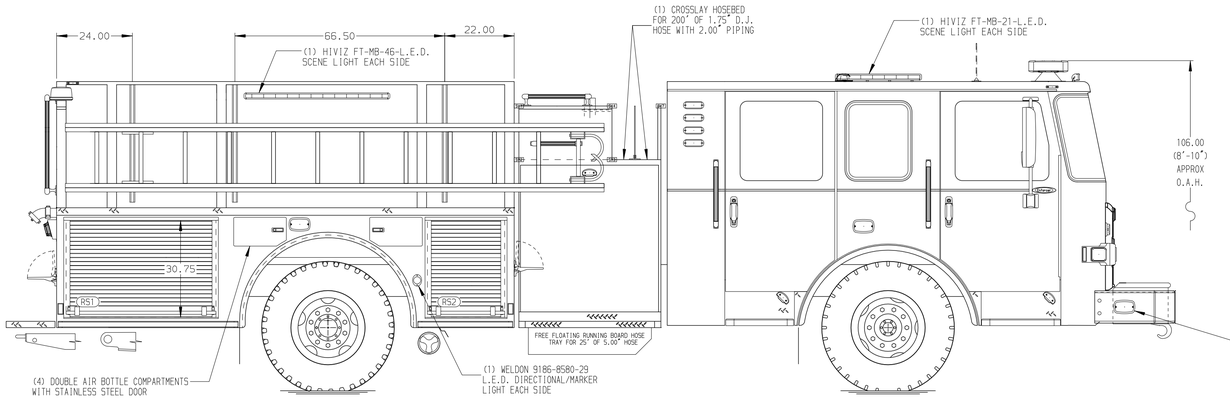

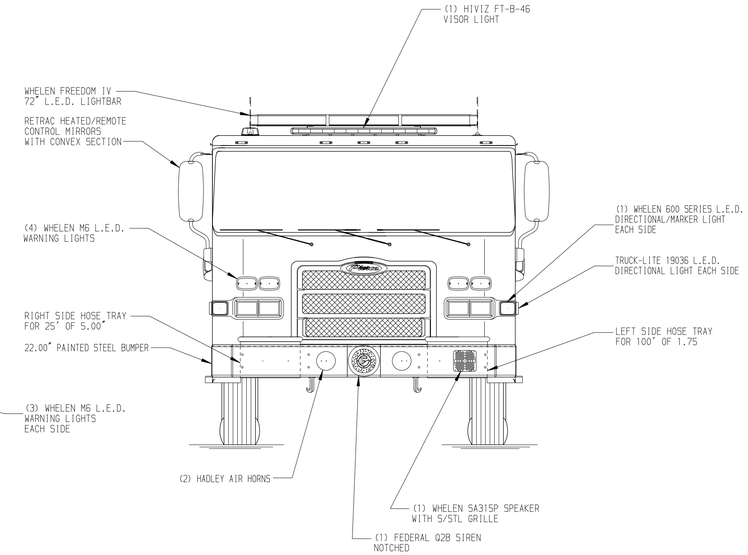

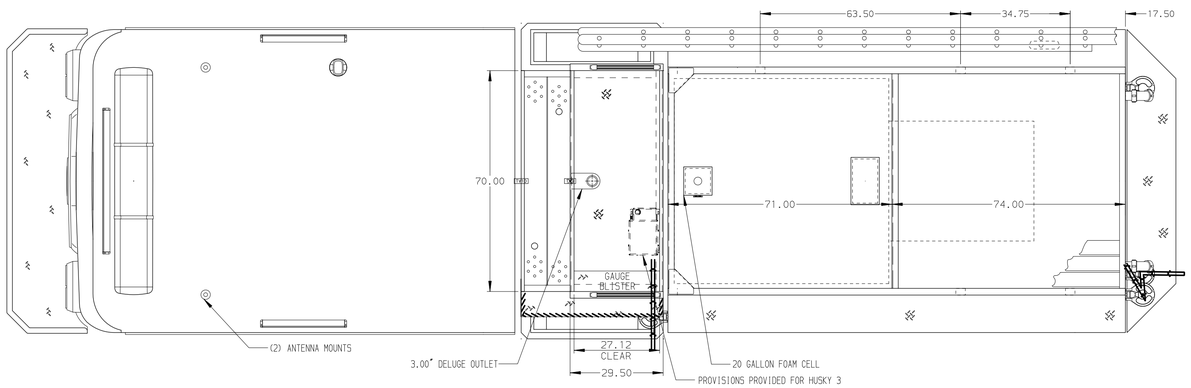

HOSEBED CAPACITIES

1. - 200' OF 1.75" D.J. POLY HOSE
2. - 400' OF 2.50" D.J. POLY HOSE
3. - 1000' OF 5.00" D.J. POLY HOSE
4. - 200' OF 1.75" D.J. POLY HOSE

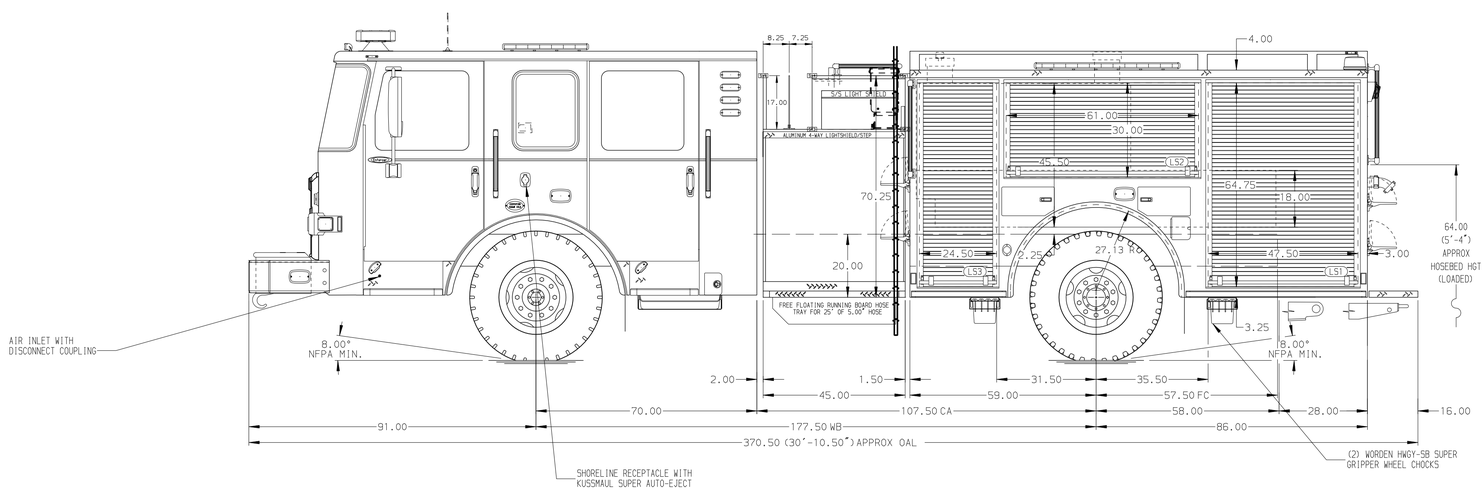

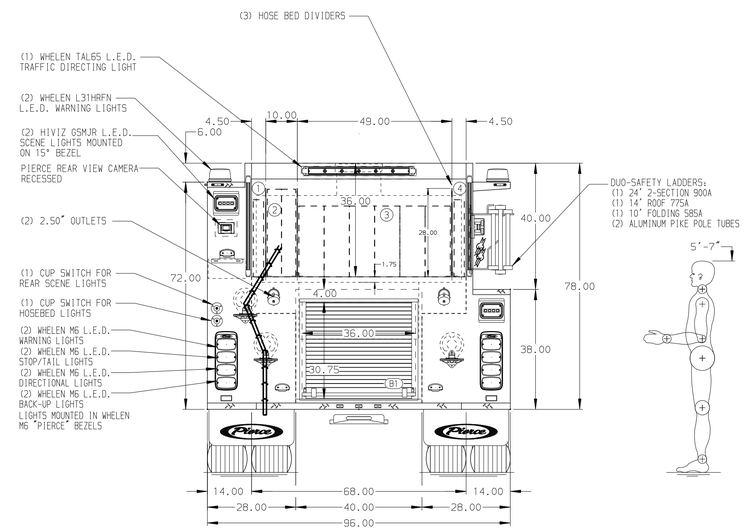

ALUMINUM BODY

SIDE ROLL AND FRONTAL IMPACT PROTECTION

NFPA 1900 (2024) COMPLIANT

NOTE

DIMENSIONS SHOWN ARE APPROXIMATE AND ARE SUBJECT TO MINOR DEVIATIONS AS MAY OCCUR OR BE NECESSARY IN CONSTRUCTION.
MINOR DETAILS NOT SHOWN.

1. PACCAR DEF TANK MOUNTED UNDER CAB ON THE DRIVER'S SIDE
2. DUAL L.E.D. LIGHT STRIPS LOCATED IN HOSE BED
3. BATTERY CHARGER LOCATED BEHIND DRIVER'S SEAT
4. BATTERY CHARGE INDICATOR DISPLAYED THROUGH DRIVER SIDE WINDOW

REV	DATE	BY	CH
V	26SEP25	JAM	AST

CHASSIS DATA
MAKE: PIERCE
MODEL: ENFORCER

Pierce MANUFACTURING INC.

TITLE: 1500 GPM, 750G TANK, 730G WATER, 20G FOAM 145" 2G PUMPER, MUX
FOR: PIERCE FIELD UNIT APPLETON, WISCONSIN
DWG NO.: 44761AD

JOB NO.	44761
SCALE	1:24
DATE	
DRAWN BY	JAM 10JUN25
CHECKED BY	KLH 12JUN25
SHEET SIZE	D
SHEET NO.	1 OF 1

View File Created 20-OCT-2025 13:40:05