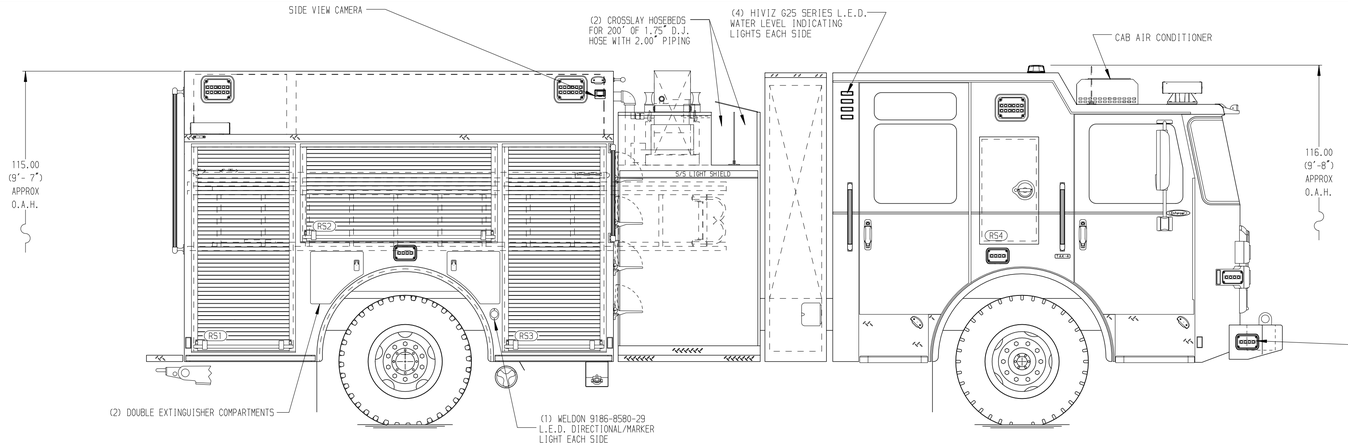

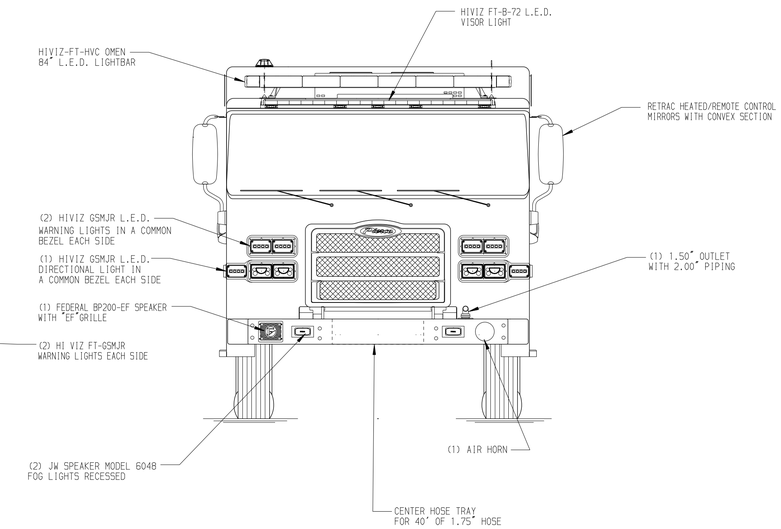

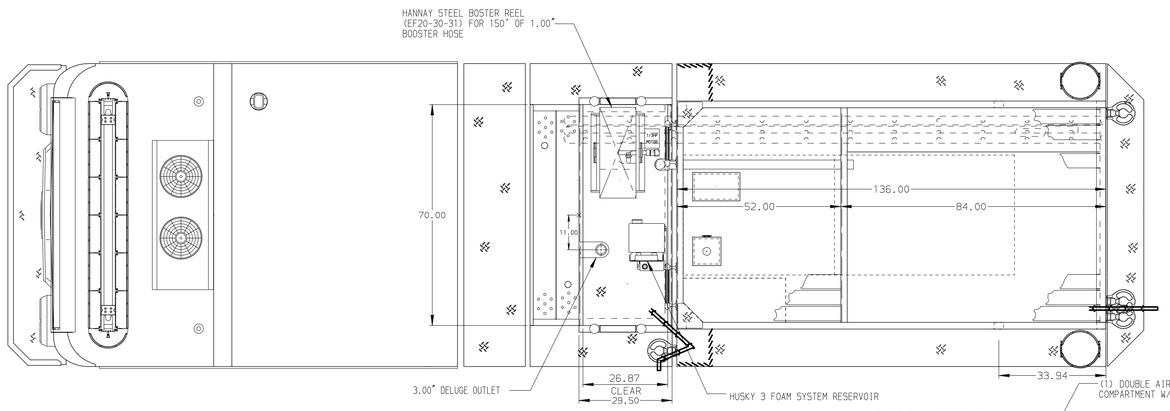

HOSEBED CAPACITIES

1. 1000' OF 5.00" D.J. HOSE
2. 400' OF 2.50" D.J. HOSE
3. 400' OF 2.50" D.J. HOSE

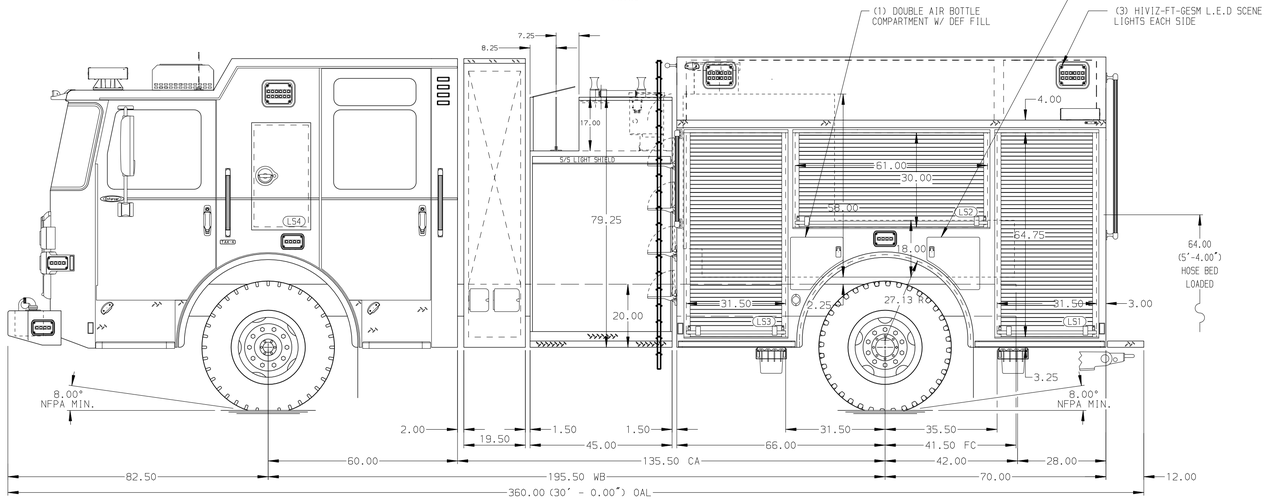

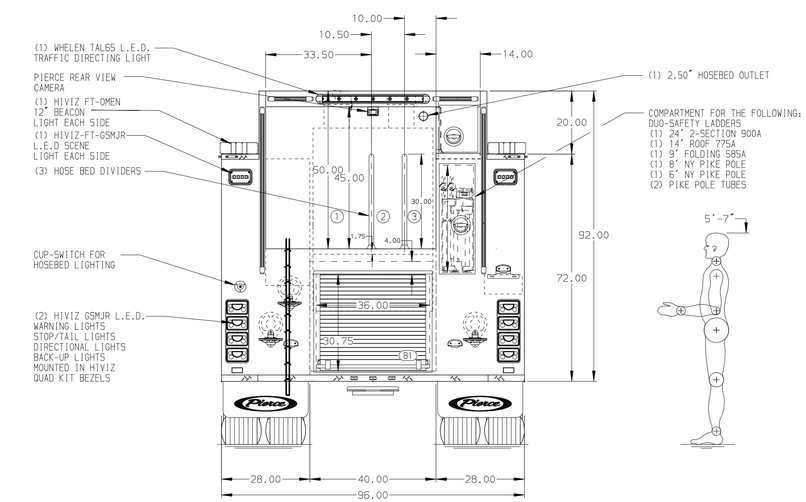

ALUMINUM BODY

SIDE ROLL AND FRONTAL PROTECTION

NOTE

DIMENSIONS SHOWN ARE APPROXIMATE AND ARE SUBJECT TO MINOR DEVIATIONS AS MAY OCCUR OR BE NECESSARY IN CONSTRUCTION.
MINOR DETAILS NOT SHOWN.

1. 30A SHORELINE RECEPTACLE WITH KUSSMAUL SUPER AUTO-EJECT LOCATED ON LEFT SIDE PUMP PANEL
2. AIR OUTLET WITH SHUT OFF VALVE ON THE DRIVER SIDE PUMP PANEL
3. BATTERY CHARGER LOCATED IN COMPARTMENT PER SHOP ORDER
4. AIR INLET WITH KUSSMAUL AIR EJECT LOCATED ON LEFT SIDE PUMP PANEL

REV	DATE	BY	CH
3	13SEP24	LST	AST
2	09JUL24	CDU	AST
1	24MAY24	CDU	CDU

CUSTOMER APPROVAL

APPROVED BY: _____

DATE: _____

Pierce MANUFACTURING INC.

CHASSIS DATA	TITLE	1500 GPM, 520 GAL TANK, 500 GAL WATER, 20 GAL FOAM 136" BODY, MUX	JOB NO. 42940
MAKE PIERCE	FOR	PIERCE FIELD UNIT APPLETON, WISCONSIN	SCALE 1:24 / DATE
MODEL ENFORCER	DWG NO.	42940AD	DRAWN BY LST 20MAY24
			CHECKED BY CDU 21MAY24
			SHEET SIZE D / SHEET NO. 1 OF 1

View File Created 13-SEP-2024 09:05:23