DATA SHEET
HF-13-750 Hydro-Foam Self-Educting Nozzle

The Elkhart Brass Hydro-Foam® self-educting nozzle design enables these products to flow foam solution without the need for special foam mixing equipment. The design of the Elkhart Brass Hydro-Foam nozzle provides the flexibility and reliability required for applying foam solution.

Features

- Rated for 750 gpm @100 psi (2900 LPM @7 BAR)
- Clear vinyl 9' (2.7 m) pick up hose included
- Pick up rates: 1% and 3%
- 2.5" female swivel inlet
- Cast and satin brass finish
- Proportioning disc or metering valve options for regulating foam
- Constant flow with built-in metering device accurately proportions foam concentrates at selected rate
- Stream pattern easily adjusted under flowing conditions from wide fog (90°) to straight (jet)
- Suitable for Class A and Class B foam including AR-AFFF, AFFF, FFF, & fluoroprotein foam concentrates

Nozzle	
	HF-13-750
Rated flow	750 gpm (2900 LPM)
Rated pressure	100 PSI (7bar)
Maximum pressure	200 PSI (14 bar)
Inlet size	2.5" NHT female swivel
Type	Constant flow (all stream patterns)
Foam pick-up rates	1%, 3%
Foam pick-up tube	Clear flexible PVC 9.0' (2.7m) x 1.25" ID
Material	Corrosion resistant brass
Weight	26.0 lbs. (11.7 kgs.)
Ambient temperature	-35°F - 232°F (-37°C - 111°C)
Maximum reach	220' (67m)
Certification	UL pending

+1 574-295-8330
www.elkhartbrass.com

ELKHART BRASS

Stream Reach

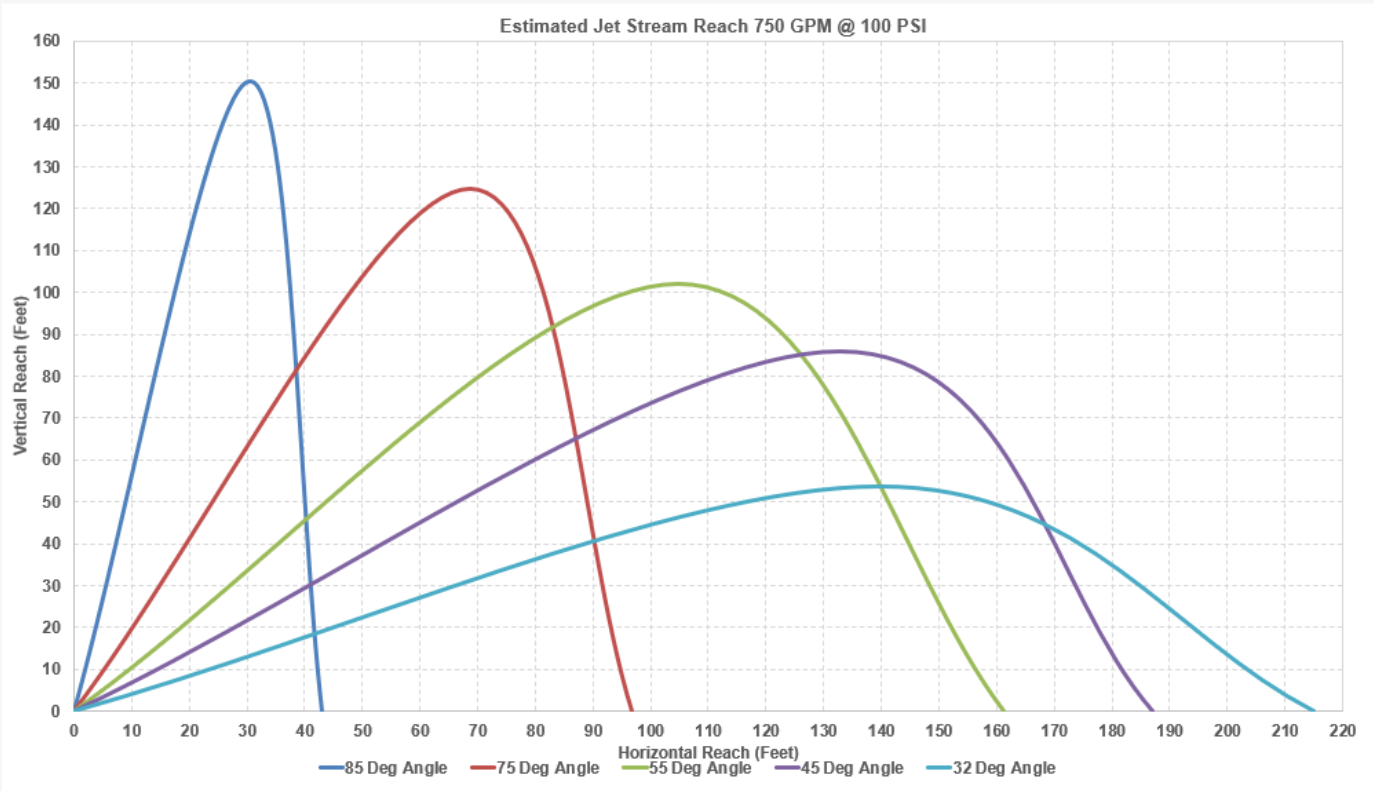

This fire stream data is an engineering estimate using just water and is provided for reference only. Actual stream performance is affected by environmental conditions and fire water supply conditions at the site. All equipment should be assessed after installation to verify the adequacy of the fire protection systems.

The flow and reach data found on the following pages is compiled and updated by our engineering staff in the testing area of our assembly department.

- The flow is determined by an electronic flowmeter while a piezometer gauge at the base/inlet of the nozzle establishes the "nozzle pressure."
- Narrow Fog (30 degrees) and Wide Fog (90 degrees) are then established by measuring where the last water droplets are falling at ground level. These tests are conducted in "still air" conditions, so the actual results will vary depending upon conditions.

Dimensions (inches)

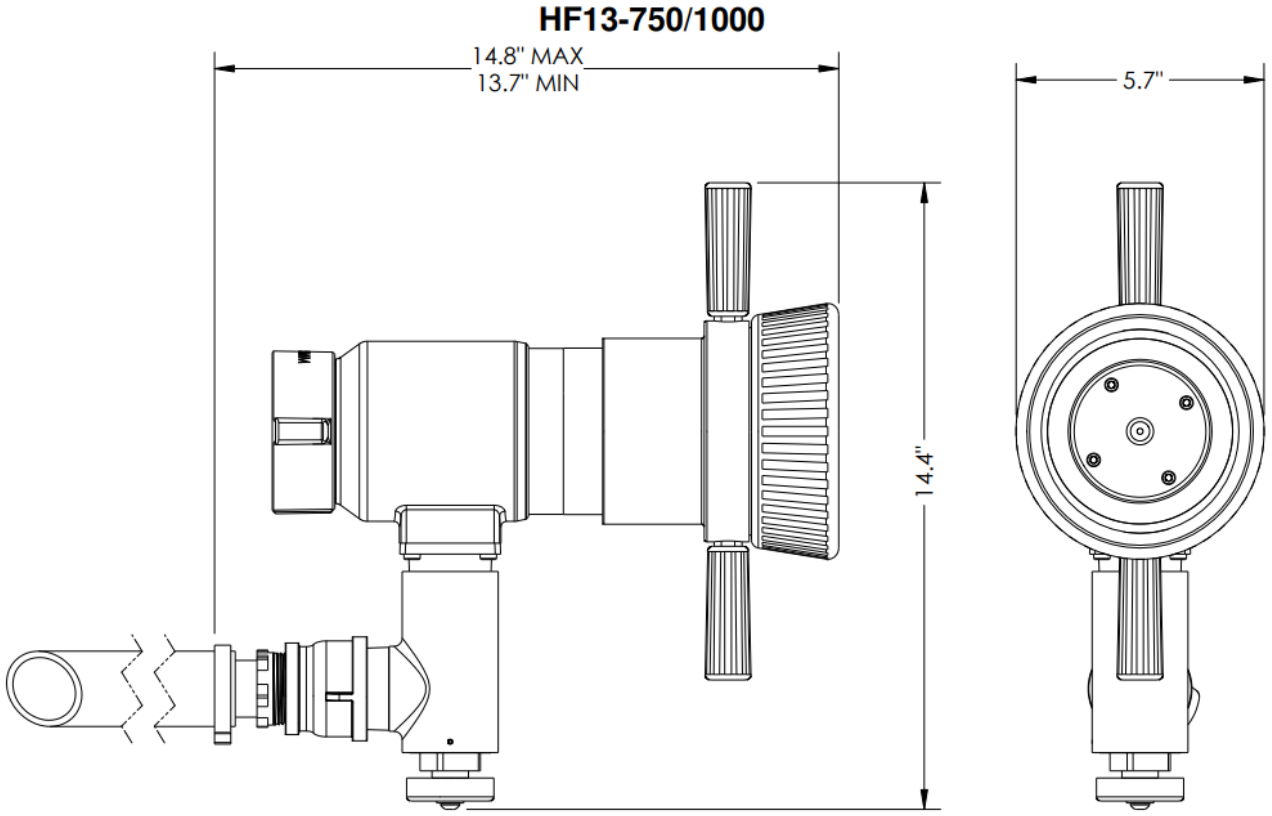
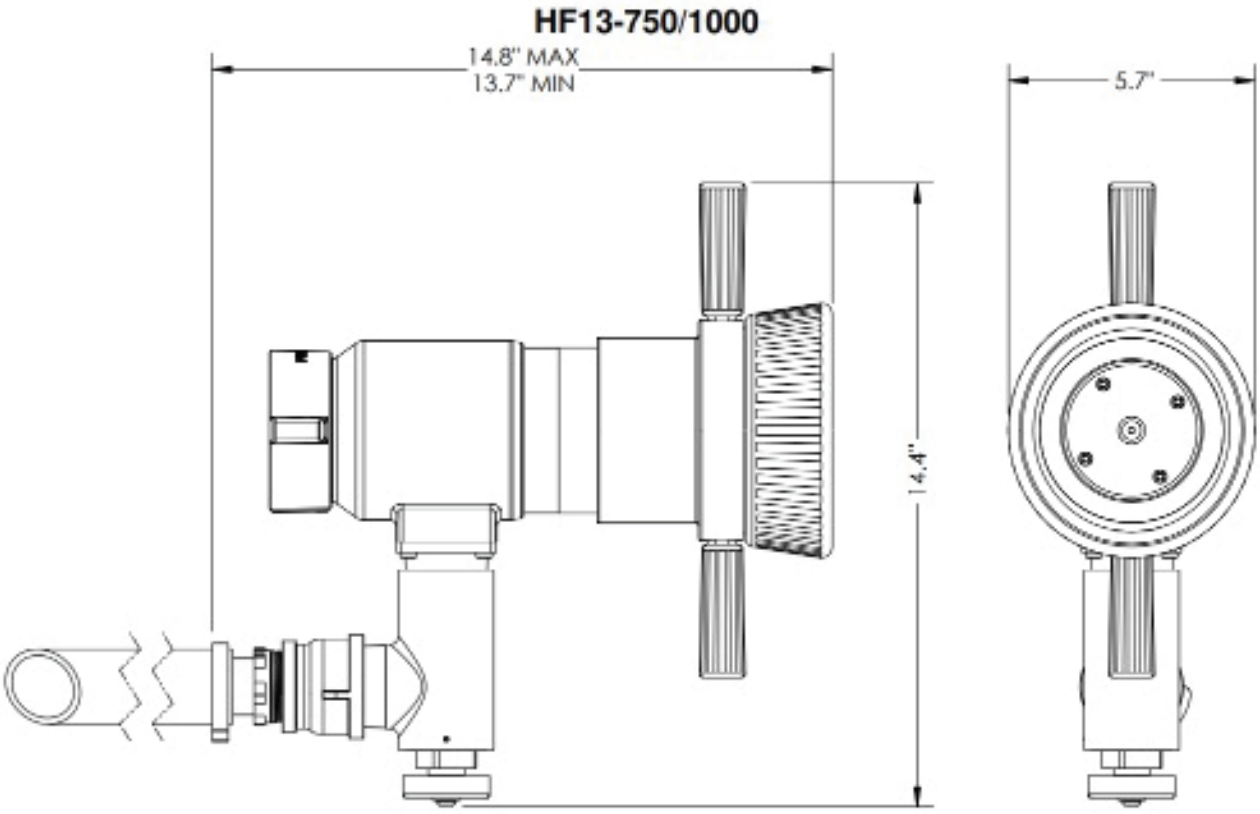
Dimensions (inches)